DEFINITIVE PLANNED UNIT DEVELOPMENT
CONCORD MEADOWS
365 CONCORD STREET
ROCKLAND, MA 02370

Planning Rcvd 1.7.22

FOR REGISTRY USE ONLY

SITE SUMMARY:

OWNERS AND PARCEL INFORMATION:

DANIEL G. & CHRISTINE M. DELPRETE
365 CONCORD STREET
ROCKLAND, MA 02370
ASSESSOR'S PARCEL: 62-35
DEED BOOK:16754, PAGE: 267

DELPRETE REALTY CORP.
365 CONCORD STREET
ROCKLAND, MA 02370
ASSESSOR'S PARCEL: 62-46
BOOK:28919, PAGE: 257
ASSESSOR'S PARCEL: 62-36
DEED BOOK:28919, PAGE: 245

DANIEL DELPRETE
365 CONCORD STREET
ROCKLAND, MA 02370
ASSESSOR'S PARCEL: 62-41&42
BOOK: 48716, PAGE: 32
ASSESSOR'S PARCEL: 62-43&44
BOOK: 37548, PAGE: 217

DEVELOPER:

CONROCK LLC
PO BOX 1414
DUXBURY, MA 02331

APPLICANT:

SULLIVAN & COMERFORD, P.C.
80 WASHINGTON STREET
BUILDING B, SUITE 7
NORWELL, MA 02061

ENGINEER AND SURVEYOR:

CAVANARO CONSULTING
687 MAIN STREET
P.O. BOX 5175
NORWELL, MA 02061

ZONING DISTRICT:

RESIDENCE DISTRICT R-1

ZONING REQUIREMENTS
RESIDENCE DISTRICT "R1"

	REQUIRED
AREA	32,670 SF
MAX. UNITS PER/32,670	1
BUILDING COVERAGE	25%
*MIN. CONTIGUOUS UPLAND INCL. RIVERFRONT	22,000 SF
MIN. LOT WIDTH	110' AT REQ. SETBACK/40' MIN. AT ANY POINT
MIN. FRONTAGE	110'
MINIMUM YARDS:	
FRONT	25'
SIDE	15'
REAR	50'
**PLANNED UNIT DEVELOPEMENT:	
MIN. TRACT AREA	10 ACRES (ZONING) 20 ACRES (PB RULES)
SETBACK ALONG STREET	25 FEET
RIVERS PROTECTION ACT	10,890 SF MAX.
OPEN SPACE	35% GROSS LAND MIN. 1 SF/1 SF TOTAL GROSS FLOOR AREA (30% WETLANDS MAX.)
MAX. UNITS	4 UNIT/ACRE SINGLE-FAMILY MAX. DWELLING UNITS IN NON-WETLAND PART OF TRADITIONAL/GRID SUBDIVISION
COMMON RECREATION	1SF/2 SF RES. FLOOR AREA (21,780 SF MIN.)

*LOTS IN ANY DISTRICT MUST CONTAIN A MINIMUM OF 22,000 SQUARE FEET OF CONTIGUOUS LAND THAT IS NOT AN AREA PROTECTED UNDER MGL C. 131, § 40 (THE WETLANDS PROTECTION ACT), NOT INCLUDING RIVERFRONT AREAS.

*RETREAT LOTS MUST CONTAIN A MINIMUM OF 32,670 SQUARE FEET OF CONTIGUOUS LAND THAT IS NOT AN AREA PROTECTED UNDER MGL C. 131, § 40 (THE WETLANDS PROTECTION ACT), NOT INCLUDING RIVERFRONT AREAS.

**NO MORE THAN 10,890 SQUARE FEET OF THE LAND MAY BE SUBJECT TO THE RIVERS PROTECTION ACT.

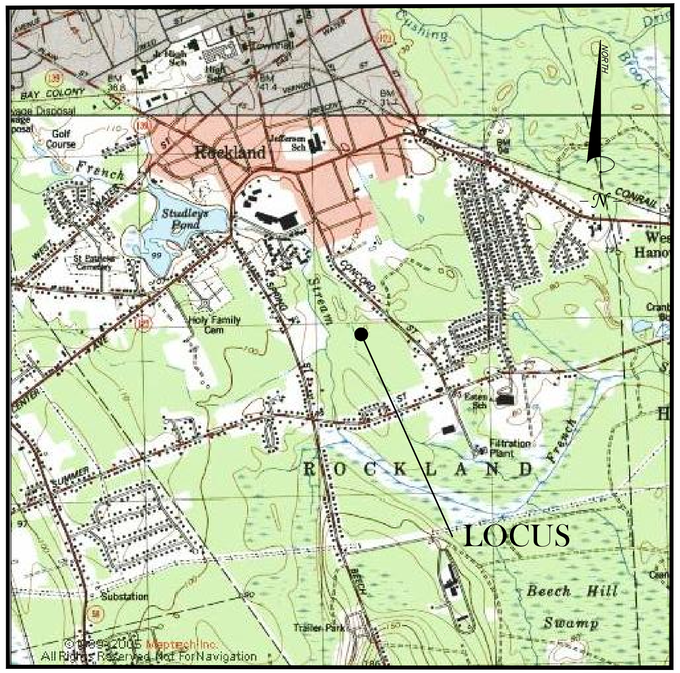

LOCUS PLAN:

(N.T.S.)

SHEET INDEX:

TITLE SHEET - TS (SHEET 1 OF 14)
EXISTING CONDITIONS PLAN 1 - EC1 (SHEET 2 OF 14)
EXISTING CONDITIONS PLAN 2 - EC2 (SHEET 3 OF 14)
PLANNED UNIT DEVELOPMENT 1 - PUD (SHEET 4 OF 14)
LAYOUT & GRADING - LG (SHEET 5 OF 14)
UTILITIES - UT (SHEET 6 OF 14)
ROADWAY LAYOUT AND PROFILE - RLP (SHEET 7 OF 14)
EROSION CONTROL - ER (SHEET 8 OF 14)
DETAIL SHEET 1 - DT1 (SHEET 9 OF 14)
DETAIL SHEET 2 - DT2 (SHEET 10 OF 14)
DETAIL SHEET 3 - DT3 (SHEET 11 OF 14)
DETAIL SHEET 4 - DT4 (SHEET 12 OF 14)
DETAIL SHEET 5 - DT5 (SHEET 13 OF 14)
OVERALL OPEN SPACE - OA (SHEET 14 OF 14)

WAIVERS REQUESTED:

TOWN OF ROCKLAND PLANNING BOARD RULES AND REGULATIONS:

1. SECTION 1.H.2.A - BUFFER ZONE - MIN. OF 50' FROM ALL EXTERNAL LOT LINES, EXCEPT WHERE FRONTS AN EXTERNAL STREET TO BE KEPT IN NATURAL STATE IF WOODED.
2. SECTION 1.H.5 - DISTANCE BETWEEN BUILDINGS CALCULATION.
3. SECTION III.B.1.F - STREETS - PROPOSED STREETS SHALL INTERSECT EXISTING AND OTHER PROPOSED STREETS AT RIGHT ANGLES FOR A DISTANCE OF 100'.
4. TABLE 1, APPENDIX B, STREET DIMENSIONAL REQUIREMENTS– FOR RESIDENTIAL FEEDER STREETS (RES. FEEDER ST. REQUIREMENTS PER DESIGN STD. SECTION III.B.E).
5. SECTION III.C.2.E.1 - DRAINAGE STRUCTURES - MINIMUM 2.5 FEET OF COVER SHALL BE REQUIRED OVER DRAIN PIPES.
6. SECTION III.B.4.A - DEAD END STREET SHALL NOT PROVIDE ACCESS TO MORE THAN 8 DWELLING UNITS.
7. SECTION III.B.4.B - LENGTH OF DEAD-END ROADS SHALL NOT EXCEED 600'.
8. SECTION III.C.2.F.10 - BASINS FOR STORMWATER MANAGEMENT SHALL BE LOCATED ON SEPARATE LAND PARCELS.
9. SECTION III.C.2.F.12 - BASINS FOR STORMWATER MANAGEMENT SHALL BE LOCATED 50' FROM ADJACENT USES, STRUCTURES AND PROPERTY LINES; AND 30' FROM WETLANDS.
10. SECTION IV.H REQUIRES AT LEAST THREE TREES FOR EVERY ONE HUNDRED FEET ON EACH SIDE OF THE ROADWAY.
11. SECTION III.C.2.F.8 REQUIRES A MAXIMUM BASIN SIDE SLOPE OF 3:1 (HORIZONTAL TO VERTICAL).
12. SECTION §III.C.2.F.4 REQUIRES A MINIMUM OF ONE FOOT OF FREEBOARD IN BASINS DURING THE 100-YEAR STORM.

LEGEND
NOT TO SCALE

—— W —— W ——	PROPOSED WATER MAIN
—— G —— G ——	PROPOSED GAS MAIN
—— S —— S ——	PROPOSED SEWER MAIN
——T/E/C——	PROPOSED TELEPHONE/ ELECTRIC/CABLE
- - - - - -	FEMA FLOOD ZONE
	WETLAND
(1)	PROPOSED LOT
— — —88— —	EXISTING CONTOUR LINE
HYD	PROPOSED HYDRANT
SMH	PROPOSED SEWER MANHOLE

DRAWING REVISIONS

ACTION	DATE	DESCRIPTION
7	1/7/22	CONSERVATION REVIEW COMMENTS
6	12/23/21	CONSERVATION REVIEW COMMENTS
5	11/30/21	CONSERVATION REVIEW COMMENTS
4	9/23/21	CONSERVATION REVIEW COMMENTS
3	8/9/21	REVIEW COMMENTS
2	7/15/21	CONSERVATION
1	6/21/21	REVIEW ENGINEER COMMENTS

SURVEY NOTES:

1. LOCUS LIES IN F.I.R.M. ZONE A, AE AND X AS SHOWN ON COMMUNITY PANEL NO. 25023C0181K DATED JULY 6, 2021.

2. SURVEY WAS CONDUCTED FROM JANUARY 2012 THRU SEPTEMBER 2021 USING BOTH LEICA ROBOTIC TOTAL STATION AND SOKKIA GPS UNIT.

3. VERTICAL CONTROL DATUM NAVD 88 AND HORIZONTAL CONTROL IS MASSACHUSETTS STATE PLANE COORDINATES NAD83.

WETLANDS NOTES:

1. RESOURCE AREAS SHOWN HEREON WERE APPROVED BY AN ORDER OF RESOURCE AREA DELINEATION BY THE ROCKLAND CONSERVATION COMMISSION, SE 273-0400 ISSUED ON JANUARY 11, 2019.

I CERTIFY THAT THE SURVEY PERFORMED CONFORMS TO THE TECHNICAL AND PROCEDURAL STANDARDS FOR THE PRACTICE OF LAND SURVEYING SET FORTH IN 250 CMR SECTION 6.01 AND 6.02.

I CERTIFY THAT THIS PLAN CONFORMS WITH THE RULES AND REGULATIONS OF THE REGISTRY OF DEEDS AND MASSACHUSETTS LAND COURT.

I CERTIFY THAT THIS PLAN WITH THE WAIVERS HEREIN REQUESTED CONFORMS WITH THE RULES AND REGULATIONS OF THE PLANNING BOARD OF THE TOWN OF ROCKLAND, MASSACHUSETTS UNDER THE SUBDIVISION CONTROL LAW AND ZONING BYLAWS OF THE TOWN OF ROCKLAND.

COMMONWEALTH OF MASSACHUSETTS — BRENDAN P. SULLIVAN — No. 41358 — REGISTERED PROFESSIONAL ENGINEER
COMMONWEALTH OF MASSACHUSETTS — BRENDAN P. SULLIVAN — No. 46922 — REGISTERED PROFESSIONAL LAND SURVEYOR

BRENDAN P. SULLIVAN, P.E., P.L.S. — 1/7/22 DATE

APPROVED BY
ROCKLAND PLANNING BOARD

DATE: _____

SIGNED:

_____

_____

_____

_____

_____

_____

I HEARBY CERTIFY THAT 20 DAYS HAVE ELAPSED SINCE PLANNING BOARD APPROVAL AND THAT NO APPEAL HAS BEEN FILED IN THIS OFFICE.

ROCKLAND TOWN CLERK — *DATE*

TITLE SHEET

CAVANARO CONSULTING
687 MAIN STREET
P.O. BOX 5175
NORWELL, MASSACHUSETTS 02061
PHONE: 781.659.8187
FAX: 781.659.8186

CONCORD MEADOWS
DEFINITIVE PUD PLAN
365 CONCORD STREET
ROCKLAND, MA 02370

PREPARED FOR:
CONROCK LLC
P.O. BOX 1414
DUXBURY, MA 02331

PROJECT NO. : 19.103	DRAWING NO.
SCALE : AS SHOWN	TS
DATE : 6/1/21	
DESIGNED BY : CCH	
DRAWN BY : CCH/MCM	SHEET NO. 1 OF 14
CHECKED BY : BPS/JCC	FILENAME: W:\PR\2019\19.103\DWG\DEF.SUB\DEF.ECON.DWG

SOIL LOGS

Date: May 18, 2021

SOILS EVALUATOR: JOHN CAVANARO P.E., S.E. – Cavanaro Consulting

TP No. 1 — Grnd El. 87.0, G.W. El. 84.5
- 0" – 87.0: Ao LOAM
- 6" – 86.5: B Horizon SANDY LOAM
- 12" – 86.0: C1 COARSE SAND
- 40" – 84.5 ▽ / 83.7: C2 SILT LOAM — WEEPING/ STANDING @ 36" MOTTLES @ 30"
- 48" Depth – 83.0

TP No. 2 — Grnd El. 87.0, G.W. El. 83.0
- 0" – 87.0: FILL
- 36" – 84.0: STUMP / FILL LOAMY SAND
- 83.0 ▽ — WEEPING @ 48" MOTTLES @ 48"
- 96" Depth – 79.0

TP No. 3 — Grnd El. 83.0, G.W. El. 80.5
- 0" – Ao LOAM
- 3" – B Horizon SANDY LOAM
- 9" – C1 COARSE SAND
- 18" – C2 SILT LOAM — WEEPING 30" MOTTLES @ 30"
- 48" Depth

TP No. 4 — Grnd El. 86.5, G.W. El. 82.5
- 0" – Ao LOAM
- 6" – B Horizon LOAMY SAND
- 12" – C1 MEDIUM SAND — WEEPING 42" MOTTLES @ 50"
- 84" Depth

TP No. 5 — Grnd El. 86.0, G.W. El. 83.5
- 0" – Ao LOAM
- 16" – C1 MEDIUM/ COARSE SAND — WEEPING/ STANDING @ 48" MOTTLES @ 30"
- 54" Depth

SOIL LOGS

Date: August 31, 2021

SOILS EVALUATOR: BRENDAN SULLIVAN P.E., S.E. – Cavanaro Consulting

TP No. 1A — Grnd El. 87.2, G.W. El. 83.9
- 0" – 87.2: Ao LOAM
- 8" – 86.5: B Horizon SANDY LOAM
- 15" – 86.0: C1 MEDIUM SAND
- 36" – 84.2 / 83.9 ▽: C2 SILT LOAM — WEEPING/ STANDING @ 40" MOTTLES @ 40"
- 60" Depth – 82.2

TP No. 2A — Grnd El. 86.3, G.W. El. 80.9
- 0" – 86.3: Ao LOAM
- 10" – 85.5: B Horizon LOAMY SAND
- 20" – 84.6: C1 COARSE SAND — WEEPING @ 55" MOTTLES @ 65"
- 65" – 80.9 ▽: C2 SILT LOAM
- 80" Depth – 79.6

TP No. 2B — Grnd El. 84.8, G.W. El. 79.4
- 0" – 84.8: FILL
- 24" – 82.8: C1 COARSE SAND
- 65" – 79.4: C2 SILT LOAM — WEEPING 60" MOTTLES @ 65"
- 85" Depth – 77.7

TP No. 4A — Grnd El. 86.5, G.W. El. 83.2
- 0" – Ao LOAM
- 9" – B Horizon LOAMY SAND
- 18" – C1 MEDIUM SAND — WEEPING 40" MOTTLES @ 40"
- 84" Depth – C2 SILT LOAM

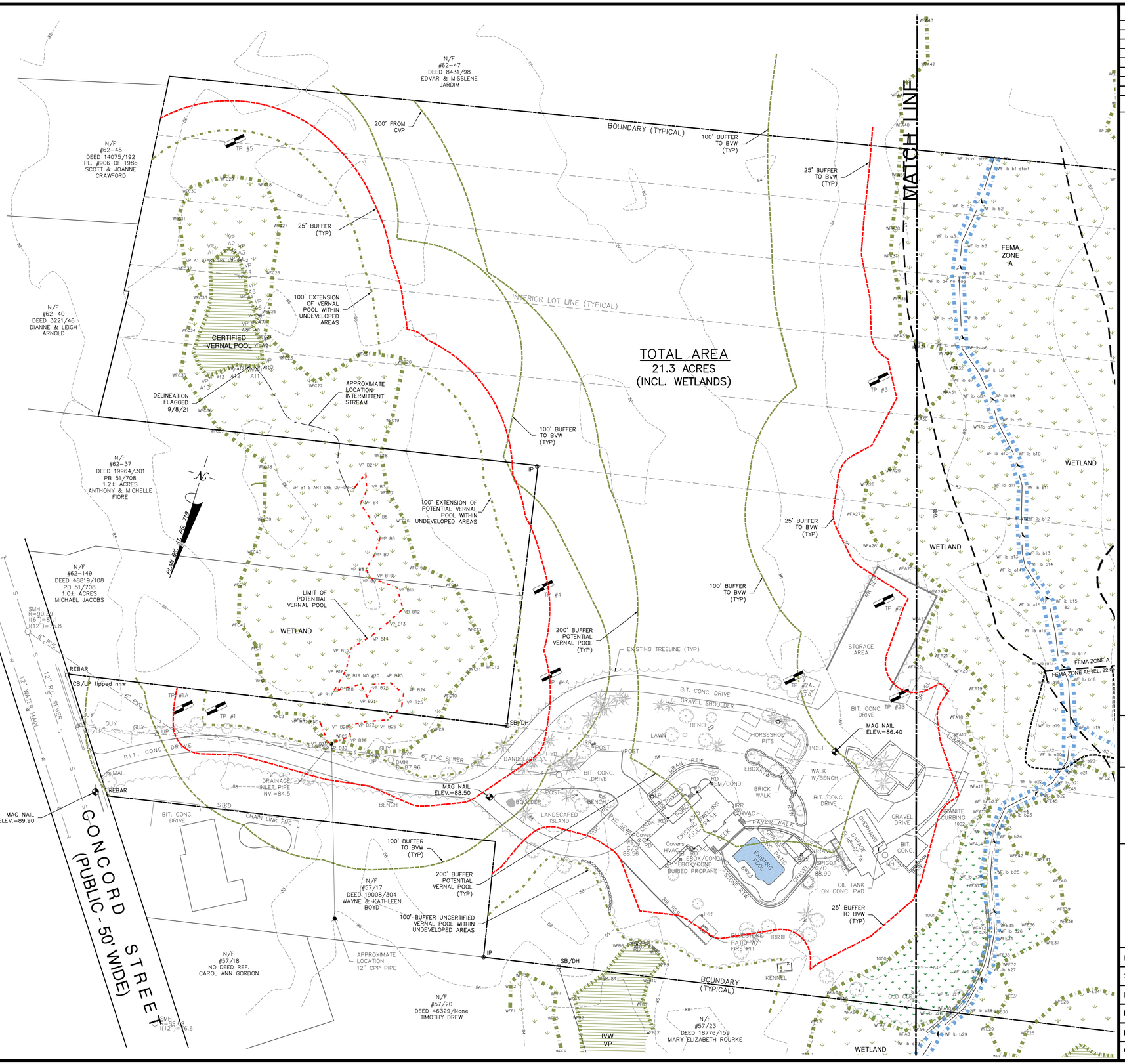

DRAWING REVISIONS

ACTION	DATE	DESCRIPTION
7	1/7/22	CONSULTANT NOI REVIEW COMMENTS
6	12/23/21	CONSULTANT NOI REVIEW COMMENTS
5	11/30/21	CONSULTANT NOI REVIEW COMMENTS
4	9/23/21	CONSULTANT NOI REVIEW COMMENTS
3	8/9/21	REVIEW COMMENTS
2	7/15/21	CONSERVATION
1	6/21/21	REVIEW ENGINEER COMMENTS

SURVEY NOTES:

1. LOCUS LIES IN F.I.R.M. ZONE A, AE AND X AS SHOWN ON COMMUNITY PANEL NO. 25023C0181K DATED JULY 6, 2021.

2. SURVEY WAS CONDUCTED FROM JANUARY 2012 THRU SEPTEMBER 2021 USING BOTH LEICA ROBOTIC TOTAL STATION AND SOKKIA GPS UNIT.

3. VERTICAL CONTROL DATUM NAVD 88 AND HORIZONTAL CONTROL IS MASSACHUSETTS STATE PLANE COORDINATES NAD83.

WETLANDS NOTES:

1. RESOURCE AREAS SHOWN HEREON WERE APPROVED BY AN ORDER OF RESOURCE AREA DELINEATION BY THE ROCKLAND CONSERVATION COMMISSION, SE 273-0400 ISSUED ON JANUARY 11, 2019.

I CERTIFY THAT THE SURVEY PERFORMED CONFORMS TO THE TECHNICAL AND PROCEDURAL STANDARDS FOR THE PRACTICE OF LAND SURVEYING SET FORTH IN 250 CMR SECTION 6.01 AND 6.02.

I CERTIFY THAT THIS PLAN CONFORMS WITH THE RULES AND REGULATIONS OF THE REGISTRY OF DEEDS AND MASSACHUSETTS LAND COURT.

I CERTIFY THAT THIS PLAN WITH THE WAIVERS HEREIN REQUESTED CONFORMS WITH THE RULES AND REGULATIONS OF THE PLANNING BOARD OF THE TOWN OF ROCKLAND, MASSACHUSETTS UNDER THE SUBDIVISION CONTROL LAW AND ZONING BYLAWS OF THE TOWN OF ROCKLAND.

COMMONWEALTH OF MASSACHUSETTS — BRENDAN P. SULLIVAN — No. 41358 — REGISTERED PROFESSIONAL ENGINEER

COMMONWEALTH OF MASSACHUSETTS — BRENDAN P. SULLIVAN — No. 46922 — REGISTERED PROFESSIONAL LAND SURVEYOR

BRENDAN P. SULLIVAN, P.E., P.L.S. — 1/7/22 DATE

APPROVED BY ROCKLAND PLANNING BOARD

DATE: _____

SIGNED: _____

I HEARBY CERTIFY THAT 20 DAYS HAVE ELAPSED SINCE PLANNING BOARD APPROVAL AND THAT NO APPEAL HAS BEEN FILED IN THIS OFFICE.

ROCKLAND TOWN CLERK — *DATE*

SCALE: 1" = 40'

0' 20' 40' 80' 120'

EXISTING CONDITIONS 1

CAVANARO CONSULTING
687 MAIN STREET
P.O. BOX 5175
NORWELL, MASSACHUSETTS 02061
PHONE: 781.659.8187
FAX: 781.659.8186

CONCORD MEADOWS
DEFINITIVE PUD PLAN
365 CONCORD STREET
ROCKLAND, MA 02370

PREPARED FOR:
CONROCK LLC
P.O. BOX 1414
DUXBURY, MA 02331

PROJECT NO. : 19.103	DRAWING NO.
SCALE : AS SHOWN	EC1
DATE : 6/1/21	
DESIGNED BY : CCH	
DRAWN BY : CCH/MCM	SHEET NO. 2 OF 14
CHECKED BY : BPS/JCC	FILENAME: W:\PR\2019\19.103\DWG\DEF.SUB\DEF.ECON.DWG

DIG SAFE — MA-RI-ME-NH-VT — CALL TOLL FREE 1-888-344-7233 — UTILITIES UNDERGROUND PLANT DAMAGE PREVENTION SYSTEM

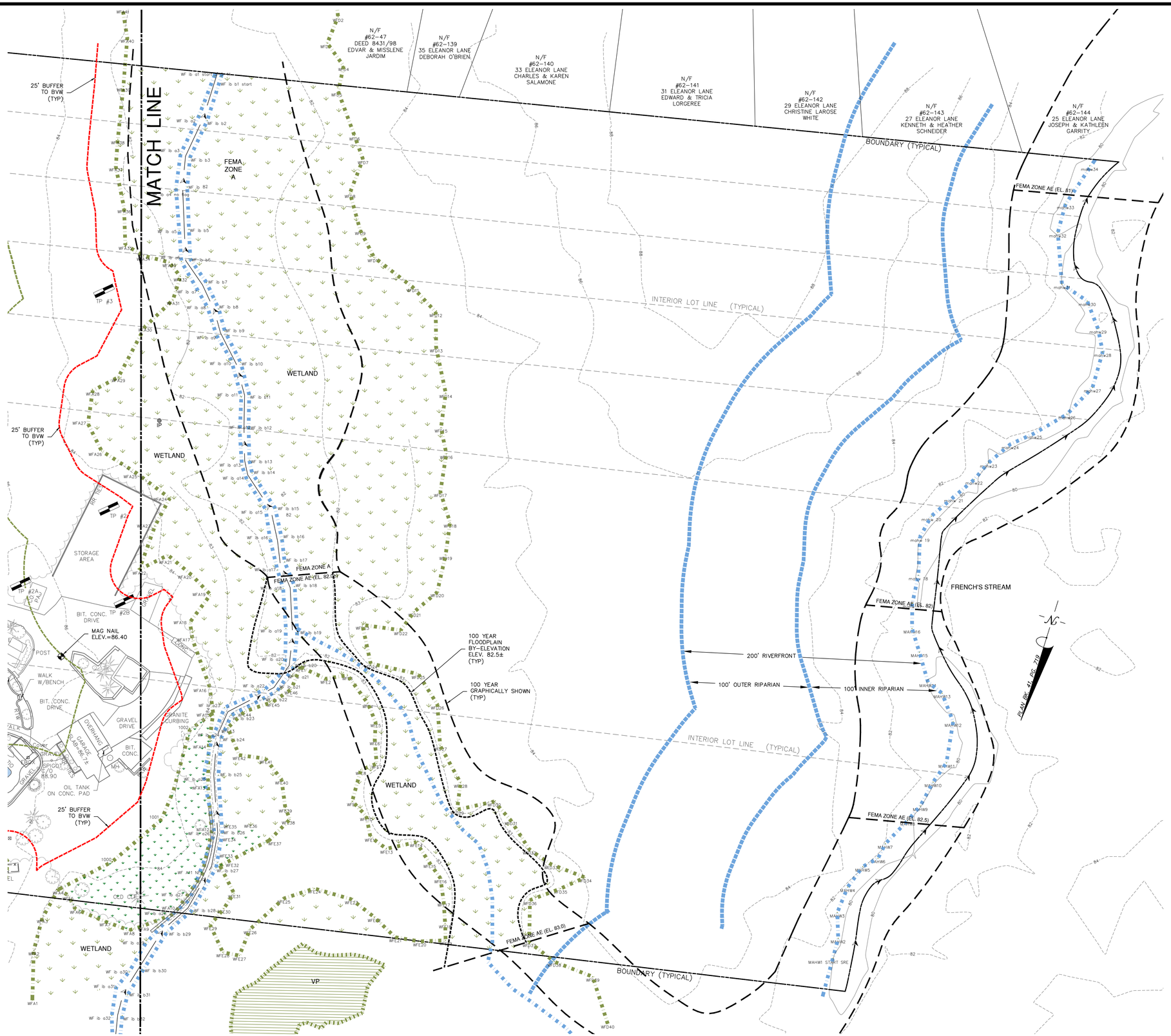

DRAWING REVISIONS

ACTION	DATE	DESCRIPTION
6	12/23/21	CONSERVATION REVIEW COMMENTS
5	11/30/21	CONSERVATION REVIEW COMMENTS
4	9/23/21	CONSERVATION REVIEW COMMENTS
3	8/9/21	REVIEW COMMENTS
2	7/15/21	CONSERVATION
1	6/21/21	REVIEW ENGINEER COMMENTS

SURVEY NOTES:

1. LOCUS LIES IN F.I.R.M. ZONE A, AE AND X AS SHOWN ON COMMUNITY PANEL NO. 25023C0181K DATED JULY 6, 2021.

2. SURVEY WAS CONDUCTED FROM JANUARY 2012 THRU SEPTEMBER 2021 USING BOTH LEICA ROBOTIC TOTAL STATION AND SOKKIA GPS UNIT.

3. VERTICAL CONTROL DATUM NAVD 88 AND HORIZONTAL CONTROL IS MASSACHUSETTS STATE PLANE COORDINATES NAD83.

WETLANDS NOTES:

1. RESOURCE AREAS SHOWN HEREON WERE APPROVED BY AN ORDER OF RESOURCE AREA DELINEATION BY THE ROCKLAND CONSERVATION COMMISSION, SE 273-0400 ISSUED ON JANUARY 11, 2019.

I CERTIFY THAT THE SURVEY PERFORMED CONFORMS TO THE TECHNICAL AND PROCEDURAL STANDARDS FOR THE PRACTICE OF LAND SURVEYING SET FORTH IN 250 CMR SECTION 6.01 AND 6.02.

I CERTIFY THAT THIS PLAN CONFORMS WITH THE RULES AND REGULATIONS OF THE REGISTRY OF DEEDS AND MASSACHUSETTS LAND COURT.

I CERTIFY THAT THIS PLAN WITH THE WAIVERS HEREIN REQUESTED CONFORMS WITH THE RULES AND REGULATIONS OF THE PLANNING BOARD OF THE TOWN OF ROCKLAND, MASSACHUSETTS UNDER THE SUBDIVISION CONTROL LAW AND ZONING BYLAWS OF THE TOWN OF ROCKLAND.

COMMONWEALTH OF MASSACHUSETTS
BRENDAN P. SULLIVAN
CIVIL
No. 47
REGISTERED PROFESSIONAL ENGINEER

COMMONWEALTH OF MASSACHUSETTS
BRENDAN P. SULLIVAN
No. 46922
REGISTERED PROFESSIONAL LAND SURVEYOR

BRENDAN P. SULLIVAN, P.E., P.L.S. — 1/7/22 DATE

APPROVED BY
ROCKLAND PLANNING BOARD

DATE: _____

SIGNED:

_____

I HEARBY CERTIFY THAT 20 DAYS HAVE ELAPSED SINCE PLANNING BOARD APPROVAL AND THAT NO APPEAL HAS BEEN FILED IN THIS OFFICE.

ROCKLAND TOWN CLERK — *DATE*

SCALE: 1" = 40'

0' 20' 40' 80' 120'

EXISTING CONDITIONS 2

CAVANARO CONSULTING
687 MAIN STREET
P.O. BOX 5175
NORWELL, MASSACHUSETTS 02061
PHONE: 781.659.8187
FAX: 781.659.8186

CONCORD MEADOWS
DEFINITIVE PUD PLAN
365 CONCORD STREET
ROCKLAND, MA 02370

PREPARED FOR:
CONROCK LLC
P.O. BOX 1414
DUXBURY, MA 02331

PROJECT NO. : 19.103	DRAWING NO.
SCALE : AS SHOWN	EC2
DATE : 6/1/21	
DESIGNED BY : CCH	
DRAWN BY : CCH/MCM	SHEET NO. 3 OF 14
CHECKED BY : BPS/JCC	FILENAME: W:\PR\2019\19.103\DWG\DEF.SUB\DEF.ECON.DWG

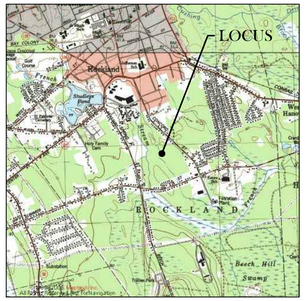

LOCUS: CONCORD STREET – ROCKLAND, MA

PLAN BK. 41 PG. 719

N/F #62-45 DEED 14075/192 PL. #906 OF 1986 SCOTT & JOANNE CRAWFORD

N/F #62-40 DEED 3221/46 DIANNE & LEIGH ARNOLD

N/F #62-37 DEED 19964/301 PB 51/708 1.2± ACRES ANTHONY & MICHELLE FIORE

N/F #62-149 DEED 48819/108 PB 51/708 1.0± ACRES MICHAEL JACOBS

N/F #62-47 DEED 8431/98 EDVAR & MISSLENE JARDIM

N/F #57/17 DEED 19008/304 WAYNE & KATHLEEN BOYD

N/F #57/18 NO DEED REF. CAROL ANN GORDON

N/F #57/20 DEED 46329/None TIMOTHY DREW

N/F #57/23 DEED 18776/159 MARY ELIZABETH ROURKE

CONCORD STREET (PUBLIC - 50' WIDE)

S 67°26'44" W 1491.55'

156.84'

S 16°18'55" E 186.72'

N 65°23'54" E 4.00'

S 14°18'27" E 110.00'

216.08'

S 68°31'15" W 377.00'

160.92'

N 27°46'27" W 298.37'

S 68°36'22" W 376.17'

56.27'

N 72°14'36" E 264.40'

N 72°14'36" E 235.81'

N 68°33'24" E 332.76'

S 22°21'36" E 17.47'

466.77'

BOUNDARY (TYPICAL)

N 26°53'45" W 211.76'

N 26°53'45" W 122.32'

S 21°21'20" E 224.51'

S 21°26'45" E 229.57'

N 24°44'45" E 385.01'

N 52°52'57" W 137.98'

A=215.06' R=60.00'

A=43.78' R=30.00'

A=346.06' R=200.00'

A=46.27' R=24.00'

R=30.00'

R=50.00'

A=5°45'39" E 90.48'

90.35'

40.0'

45.00'

50.86'

99.03'

0.25'

REBAR

CB/LP

SB/DH

IP

VP

IVW VP

OPEN SPACE 54,936 S.F. TOTAL (35,646 S.F UPLAND) (19,290 S.F. WETLAND)

OPEN SPACE 14,905 S.F. TOTAL (11,475 S.F UPLAND) (3,430 S.F. WETLAND)

OPEN SPACE 5,686 S.F. TOTAL

200' FROM CVP

25' BUFFER (TYP)

100' EXTENSION OF VERNAL POOL WITHIN UNDEVELOPED AREAS

DELINEATION FLAGGED 9/8/21

APPROXIMATE LOCATION INTERMITTENT STREAM

100' EXTENSION OF POTENTIAL VERNAL POOL WITHIN UNDEVELOPED AREAS

LIMIT OF POTENTIAL VERNAL POOL

WETLAND

200' BUFFER POTENTIAL VERNAL POOL (TYP)

100' BUFFER TO BVW (TYP)

100' FROM 100' EXTENSION OF UNCERTIFIED VERNAL POOL WITHIN UNDEVELOPED AREAS

PROPOSED PUD SUBDIVIDED LOT LINE (TYP.)

100' BUFFER TO BVW (TYP)

25' BUFFER TO BVW (TYP)

UNNAMED INTERMITTENT STREAM

FEMA ZONE A

FEMA ZONE A ELEV. 82.49'

UPLAND

DRAINAGE EASEMENT

ACCESS EASEMENT

RIGHT OF WAY 44,714 S.F. TOTAL

LOT 1 16,123 S.F. TOTAL

LOT 2 7,619 S.F. TOTAL

LOT 3 8,237 S.F. TOTAL

LOT 4 11,118 S.F. TOTAL

LOT 5 14,918 S.F. TOTAL (11,968 S.F. UPLAND)

LOT 6 10,733 S.F. TOTAL

LOT 7 14,574 S.F. TOTAL

LOT 8 7,271 S.F. TOTAL

LOT 9 5,157 S.F. TOTAL

LOT 10 4,793 S.F. TOTAL

LOT 11 5,064 S.F. TOTAL

LOT 12 13,159 S.F. TOTAL (11,042 S.F. UPLAND)

LOT 13 11,933 S.F. TOTAL (8,917 S.F. UPLAND)

LOT 14 11,973 S.F. TOTAL (10,993 S.F. UPLAND)

LOT 15 10,551 S.F. TOTAL (9,815 S.F. UPLAND)

LOT 16 10,412 S.F. TOTAL (7,637 S.F. UPLAND)

LOT 17 10,317 S.F. TOTAL (9,478 S.F. UPLAND)

LOT 18 11,350 S.F. TOTAL (11,048 S.F. UPLAND)

LOT 19 15,092 S.F. TOTAL (14,816 S.F. UPLAND)

LOT 20 96,000 S.F. TOTAL 2.2 ACRES (77,363 S.F. UPLAND)

LEGEND
NOT TO SCALE

—W—W—	PROPOSED WATER MAIN
—G—G—	PROPOSED GAS MAIN
—S—S—	PROPOSED SEWER MAIN
—T/E/C—	PROPOSED TELEPHONE/ ELECTRIC/CABLE
▬▬▬	FEMA FLOOD ZONE
	WETLAND
(1)	PROPOSED PUD LOT
— 80 —	CONTOUR LINE
HYD	HYDRANT
SMH	SEWER MANHOLE

DRAWING REVISIONS

ACTION	DATE	DESCRIPTION
7	1/7/22	CONSERVATION REVIEW COMMENTS
6	12/23/21	CONSERVATION REVIEW COMMENTS
5	11/30/21	CONSERVATION REVIEW COMMENTS
4	9/23/21	CONSERVATION REVIEW COMMENTS
3	8/9/21	REVIEW COMMENTS
2	7/15/21	CONSERVATION
1	6/21/21	REVIEW ENGINEER COMMENTS

SURVEY NOTES:

1. LOCUS LIES IN F.I.R.M. ZONE A, AE AND X AS SHOWN ON COMMUNITY PANEL NO. 25023C0181K DATED JULY 6, 2021.

2. SURVEY WAS CONDUCTED FROM JANUARY 2012 THRU SEPTEMBER 2021 USING BOTH LEICA ROBOTIC TOTAL STATION AND SOKKIA GPS UNIT.

3. VERTICAL CONTROL DATUM NAVD 88 AND HORIZONTAL CONTROL IS MASSACHUSETTS STATE PLANE COORDINATES NAD83.

WETLANDS NOTES:

1. RESOURCE AREAS SHOWN HEREON WERE APPROVED BY AN ORDER OF RESOURCE AREA DELINEATION BY THE ROCKLAND CONSERVATION COMMISSION, SE 273-0400 ISSUED ON JANUARY 11, 2019.

I CERTIFY THAT THE SURVEY PERFORMED CONFORMS TO THE TECHNICAL AND PROCEDURAL STANDARDS FOR THE PRACTICE OF LAND SURVEYING SET FORTH IN 250 CMR SECTION 6.01 AND 6.02.

I CERTIFY THAT THIS PLAN CONFORMS WITH THE RULES AND REGULATIONS OF THE REGISTRY OF DEEDS AND MASSACHUSETTS LAND COURT.

I CERTIFY THAT THIS PLAN WITH THE WAIVERS HEREIN REQUESTED CONFORMS WITH THE RULES AND REGULATIONS OF THE PLANNING BOARD OF THE TOWN OF ROCKLAND, MASSACHUSETTS UNDER THE SUBDIVISION CONTROL LAW AND ZONING BYLAWS OF THE TOWN OF ROCKLAND.

COMMONWEALTH OF MASSACHUSETTS BRENDAN P. SULLIVAN No. 41358 REGISTERED PROFESSIONAL ENGINEER

COMMONWEALTH OF MASSACHUSETTS BRENDAN P. SULLIVAN No. 46922 REGISTERED PROFESSIONAL LAND SURVEYOR

BRENDAN P. SULLIVAN, P.E., P.L.S. — 1/7/22 DATE

APPROVED BY ROCKLAND PLANNING BOARD

DATE: _____

SIGNED: _____

I HEARBY CERTIFY THAT 20 DAYS HAVE ELAPSED SINCE PLANNING BOARD APPROVAL AND THAT NO APPEAL HAS BEEN FILED IN THIS OFFICE.

ROCKLAND TOWN CLERK — DATE

SCALE: 1" = 40'

0' 20' 40' 80' 120'

PLANNED UNIT DEVELOPMENT 1

CAVANARO CONSULTING
687 MAIN STREET
P.O. BOX 5175
NORWELL, MASSACHUSETTS 02061
PHONE: 781.659.8187
FAX: 781.659.8186

CONCORD MEADOWS DEFINITIVE PUD PLAN
365 CONCORD STREET
ROCKLAND, MA 02370

PREPARED FOR:
CONROCK LLC
P.O. BOX 1414
DUXBURY, MA 02331

PROJECT NO. : 19.103	DRAWING NO.
SCALE : AS SHOWN	PUD
DATE : 6/1/21	
DESIGNED BY : CCH	
DRAWN BY : CCH/MCM	SHEET NO. 4 OF 14
CHECKED BY : BPS/JCC	FILENAME: W:\PR\2019\19.103\DWG\DEF.SUB\DEF.ECON.DWG

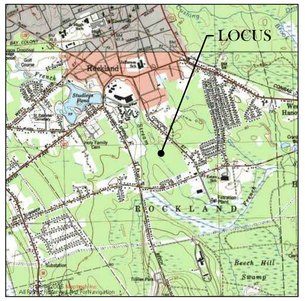

LOCUS: CONCORD STREET – ROCKLAND, MA

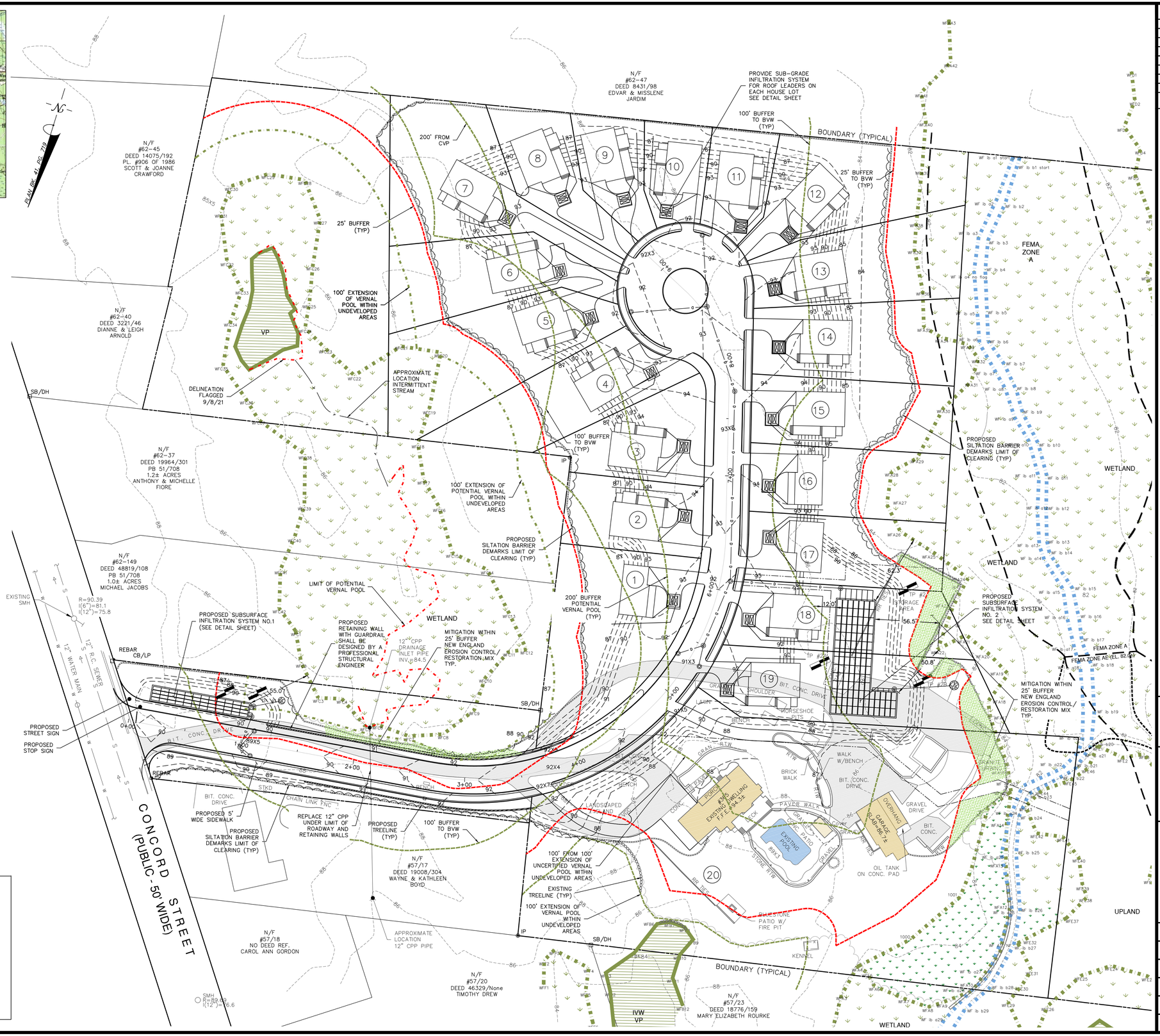

LEGEND
NOT TO SCALE

W W	PROPOSED WATER MAIN
	PROPOSED GAS MAIN
	PROPOSED SEWER MAIN
T/E/C	PROPOSED TELEPHONE/ ELECTRIC/CABLE
	FEMA FLOOD ZONE
	WETLAND
1	PROPOSED PUD LOT
80	CONTOUR LINE
HYD	HYDRANT
SMH	SEWER MANHOLE

DRAWING REVISIONS

ACTION	DATE	DESCRIPTION
7	1/7/22	CONSERVATION REVIEW COMMENTS
6	12/23/21	CONSERVATION REVIEW COMMENTS
5	11/30/21	CONSERVATION REVIEW COMMENTS
4	9/23/21	CONSERVATION REVIEW COMMENTS
3	8/9/21	REVIEW COMMENTS
2	7/15/21	CONSERVATION
1	6/21/21	REVIEW ENGINEER COMMENTS

SURVEY NOTES:

1. LOCUS LIES IN F.I.R.M. ZONE A, AE AND X AS SHOWN ON COMMUNITY PANEL NO. 25023C0181K DATED JULY 6, 2021.

2. SURVEY WAS CONDUCTED FROM JANUARY 2012 THRU SEPTEMBER 2021 USING BOTH LEICA ROBOTIC TOTAL STATION AND SOKKIA GPS UNIT.

3. VERTICAL CONTROL DATUM NAVD 88 AND HORIZONTAL CONTROL IS MASSACHUSETTS STATE PLANE COORDINATES NAD83.

WETLANDS NOTES:

1. RESOURCE AREAS SHOWN HEREON WERE APPROVED BY AN ORDER OF RESOURCE AREA DELINEATION BY THE ROCKLAND CONSERVATION COMMISSION, SE 273-0400 ISSUED ON JANUARY 11, 2019.

I CERTIFY THAT THE SURVEY PERFORMED CONFORMS TO THE TECHNICAL AND PROCEDURAL STANDARDS FOR THE PRACTICE OF LAND SURVEYING SET FORTH IN 250 CMR SECTION 6.01 AND 6.02.

I CERTIFY THAT THIS PLAN CONFORMS WITH THE RULES AND REGULATIONS OF THE REGISTRY OF DEEDS AND MASSACHUSETTS LAND COURT.

I CERTIFY THAT THIS PLAN WITH THE WAIVERS HEREIN REQUESTED CONFORMS WITH THE RULES AND REGULATIONS OF THE PLANNING BOARD OF THE TOWN OF ROCKLAND, MASSACHUSETTS UNDER THE SUBDIVISION CONTROL LAW AND ZONING BYLAWS OF THE TOWN OF ROCKLAND.

COMMONWEALTH OF MASSACHUSETTS BRENDAN P. SULLIVAN No. 34358 REGISTERED PROFESSIONAL ENGINEER

COMMONWEALTH OF MASSACHUSETTS BRENDAN P. SULLIVAN No. 46922 REGISTERED PROFESSIONAL LAND SURVEYOR

BRENDAN P. SULLIVAN, P.E., P.L.S. — 1/7/22 DATE

APPROVED BY
ROCKLAND PLANNING BOARD

DATE: _____

SIGNED: _____

I HEARBY CERTIFY THAT 20 DAYS HAVE ELAPSED SINCE PLANNING BOARD APPROVAL AND THAT NO APPEAL HAS BEEN FILED IN THIS OFFICE.

ROCKLAND TOWN CLERK — *DATE*

SCALE: 1" = 40'

0' 20' 40' 80' 120'

LAYOUT AND GRADING

CAVANARO CONSULTING
687 MAIN STREET
P.O. BOX 5175
NORWELL, MASSACHUSETTS 02061
PHONE: 781.659.8187
FAX: 781.659.8186

CONCORD MEADOWS DEFINITIVE PUD PLAN
365 CONCORD STREET
ROCKLAND, MA 02370

PREPARED FOR:
CONROCK LLC
P.O. BOX 1414
DUXBURY, MA 02331

PROJECT NO. :	19.103	DRAWING NO.
SCALE :	AS SHOWN	LG
DATE :	7/12/21	
DESIGNED BY :	CCH	
DRAWN BY :	CCH/MCM	SHEET NO. 5 OF 14
CHECKED BY :	BPS/JCC	FILENAME: W:\PR\2019\19.103\DWG\DEF.SUB\DEF.ECON.DWG

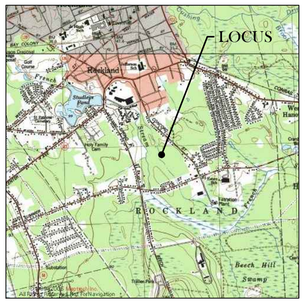

LOCUS: CONCORD STREET – ROCKLAND, MA

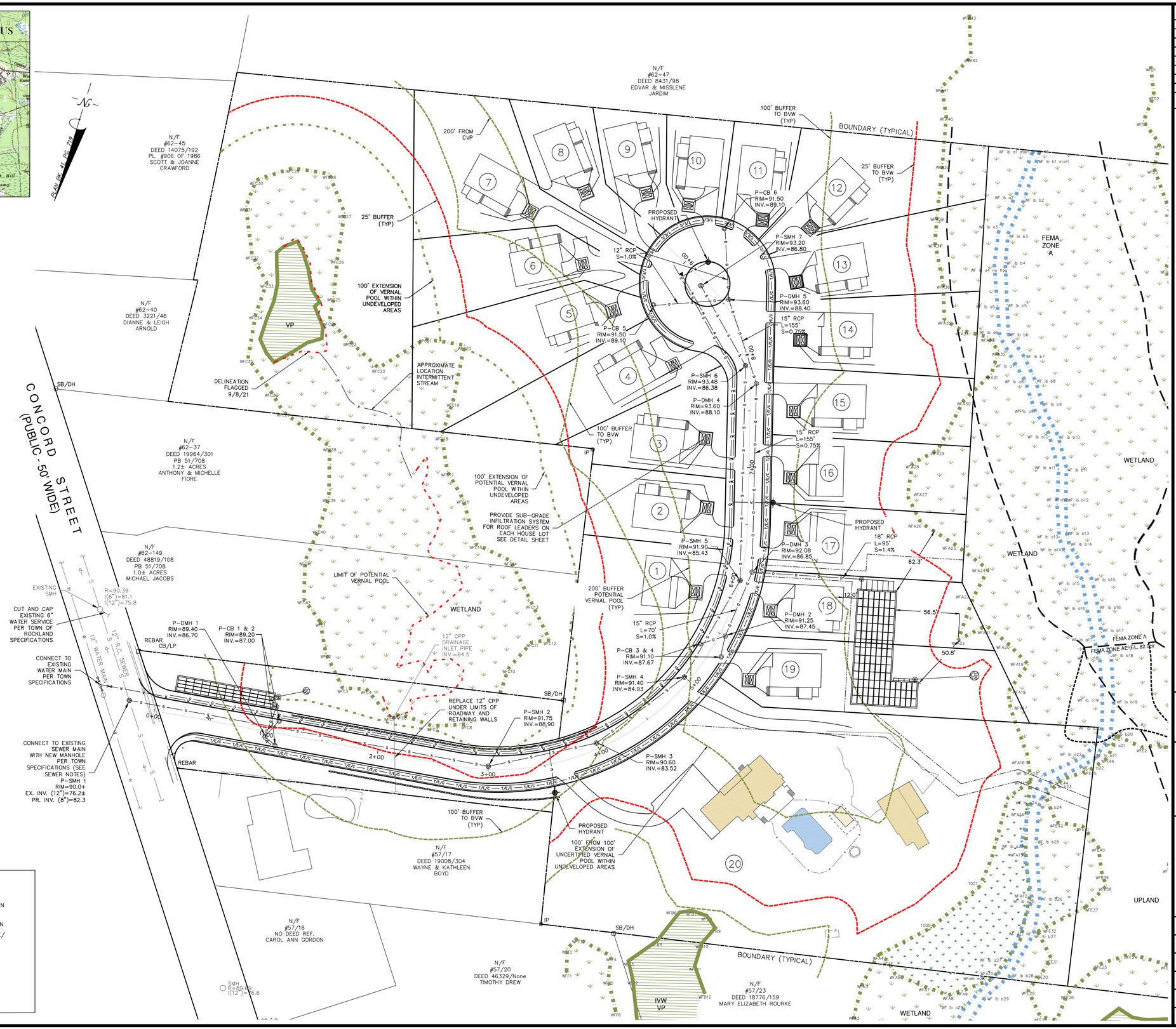

LEGEND
NOT TO SCALE

W W	PROPOSED WATER MAIN
	PROPOSED GAS MAIN
	PROPOSED SEWER MAIN
T/E/C	PROPOSED TELEPHONE/ ELECTRIC/CABLE
	FEMA FLOOD ZONE
	WETLAND
1	PROPOSED PUD LOT
80	CONTOUR LINE
HYD	HYDRANT
SMH	SEWER MANHOLE

DRAWING REVISIONS

ACTION	DATE	DESCRIPTION
7	1/7/22	CONSERVATION REVIEW COMMENTS
6	12/23/21	CONSERVATION REVIEW COMMENTS
5	11/30/21	CONSERVATION REVIEW COMMENTS
4	9/23/21	CONSERVATION REVIEW COMMENTS
3	8/9/21	REVIEW COMMENTS
2	7/15/21	CONSERVATION
1	6/21/21	REVIEW ENGINEER COMMENTS

SURVEY NOTES:

1. LOCUS LIES IN F.I.R.M. ZONE A, AE AND X AS SHOWN ON COMMUNITY PANEL NO. 25023C0181K DATED JULY 6, 2021.

WETLANDS NOTES:

1. RESOURCE AREAS SHOWN HEREON WERE APPROVED BY AN ORDER OF RESOURCE AREA DELINEATION BY THE ROCKLAND CONSERVATION COMMISSION, SE 273-0400 ISSUED ON JANUARY 11, 2019.

SEWER NOTES:

1. PROPOSED SEWER MAIN AND SEWER SERVICES SHALL BE COORDINATED WITH TOWN OF ROCKLAND SEWER DEPARTMENT. CONTRACTOR SHALL STRICTLY ABIDE BY ALL SEWER DEPARTMENT REQUIREMENTS.

2. PROPOSED SEWER LINE AND SEWER COMPONENTS SHALL BE LOCATED A MINIMUM OF 10' FROM AND AT LEAST 18" BELOW WATER SUPPLY LINE. WHEREVER SEWER LINES MUST BE WITHIN 10' OF WATER SUPPLY, WATER LINE SHALL BE SLEEVED.

I CERTIFY THAT THE SURVEY PERFORMED CONFORMS TO THE TECHNICAL AND PROCEDURAL STANDARDS FOR THE PRACTICE OF LAND SURVEYING SET FORTH IN 250 CMR SECTION 6.01 AND 6.02.

I CERTIFY THAT THIS PLAN CONFORMS WITH THE RULES AND REGULATIONS OF THE REGISTRY OF DEEDS AND MASSACHUSETTS LAND COURT.

I CERTIFY THAT THIS PLAN WITH THE WAIVERS HEREIN REQUESTED CONFORMS WITH THE RULES AND REGULATIONS OF THE PLANNING BOARD OF THE TOWN OF ROCKLAND, MASSACHUSETTS UNDER THE SUBDIVISION CONTROL LAW AND ZONING BYLAWS OF THE TOWN OF ROCKLAND.

COMMONWEALTH OF MASSACHUSETTS BRENDAN P. SULLIVAN No. 41358 REGISTERED PROFESSIONAL ENGINEER

COMMONWEALTH OF MASSACHUSETTS BRENDAN P. SULLIVAN No. 46922 REGISTERED PROFESSIONAL LAND SURVEYOR

BRENDAN P. SULLIVAN, P.E., P.L.S. — 1/7/22 DATE

APPROVED BY
ROCKLAND PLANNING BOARD

DATE: _____

SIGNED:

_____

I HEARBY CERTIFY THAT 20 DAYS HAVE ELAPSED SINCE PLANNING BOARD APPROVAL AND THAT NO APPEAL HAS BEEN FILED IN THIS OFFICE.

ROCKLAND TOWN CLERK — *DATE*

SCALE: 1" = 40'

0' 20' 40' 80' 120'

UTILITIES

CAVANARO CONSULTING
687 MAIN STREET
P.O. BOX 5175
NORWELL, MASSACHUSETTS 02061
PHONE: 781.659.8187
FAX: 781.659.8186

CONCORD MEADOWS DEFINITIVE PUD PLAN
365 CONCORD STREET
ROCKLAND, MA 02370

PREPARED FOR:
CONROCK LLC
P.O. BOX 1414
DUXBURY, MA 02331

PROJECT NO. : 19.103	DRAWING NO.	
SCALE : AS SHOWN	UT	
DATE : 7/12/21		
DESIGNED BY : CCH		
DRAWN BY : CCH/MCM	SHEET NO. 6 OF 14	
CHECKED BY : BPS/JCC	FILENAME: W:\PR\2019\19.103\DWG\DEF.SUB\DEF.ECON.DWG	

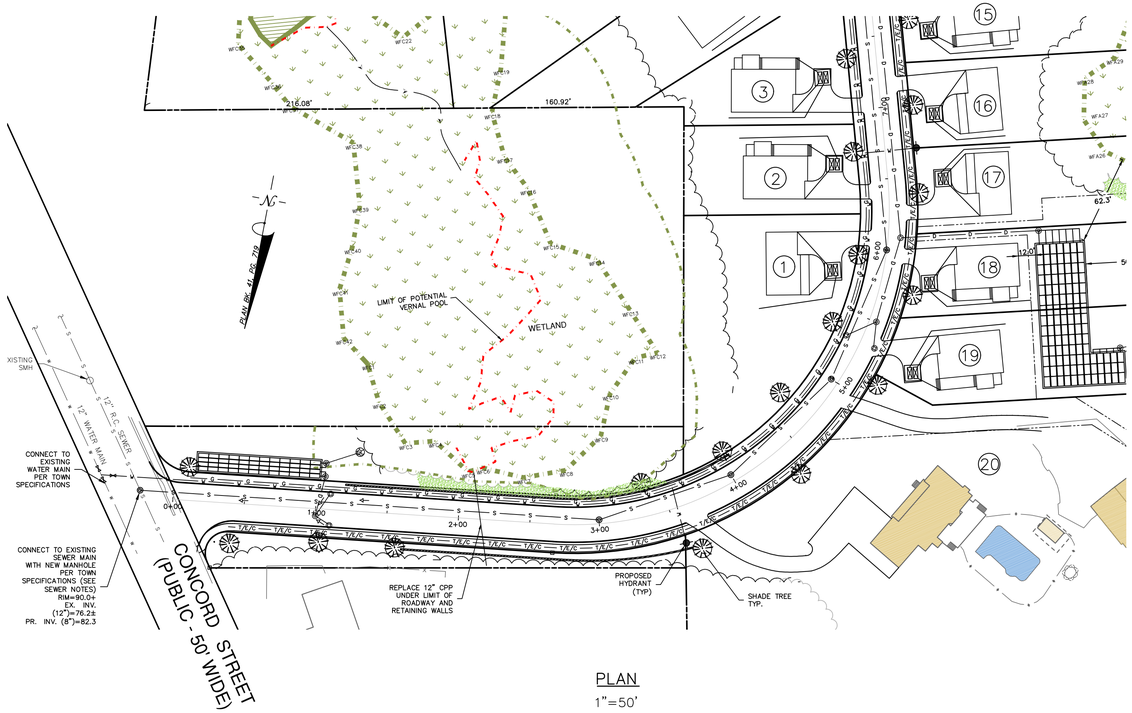

PLAN
1"=50'

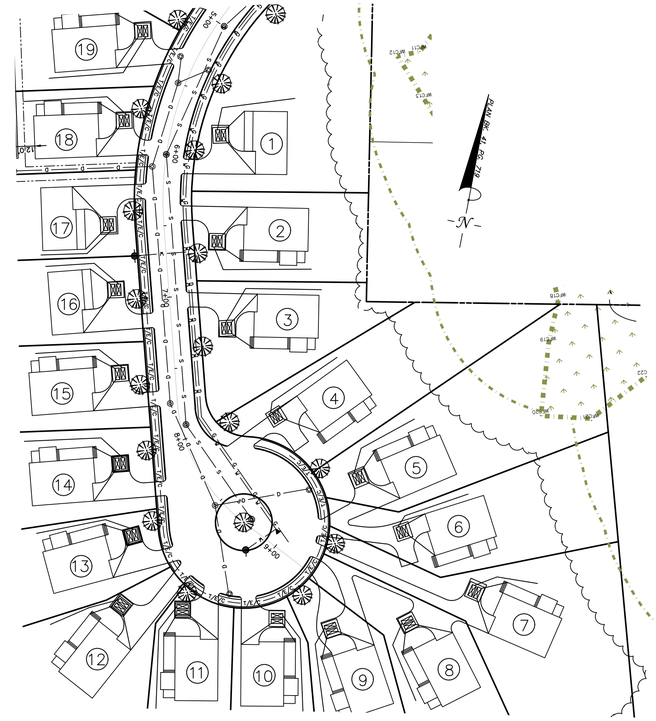

PLAN
1"=50'

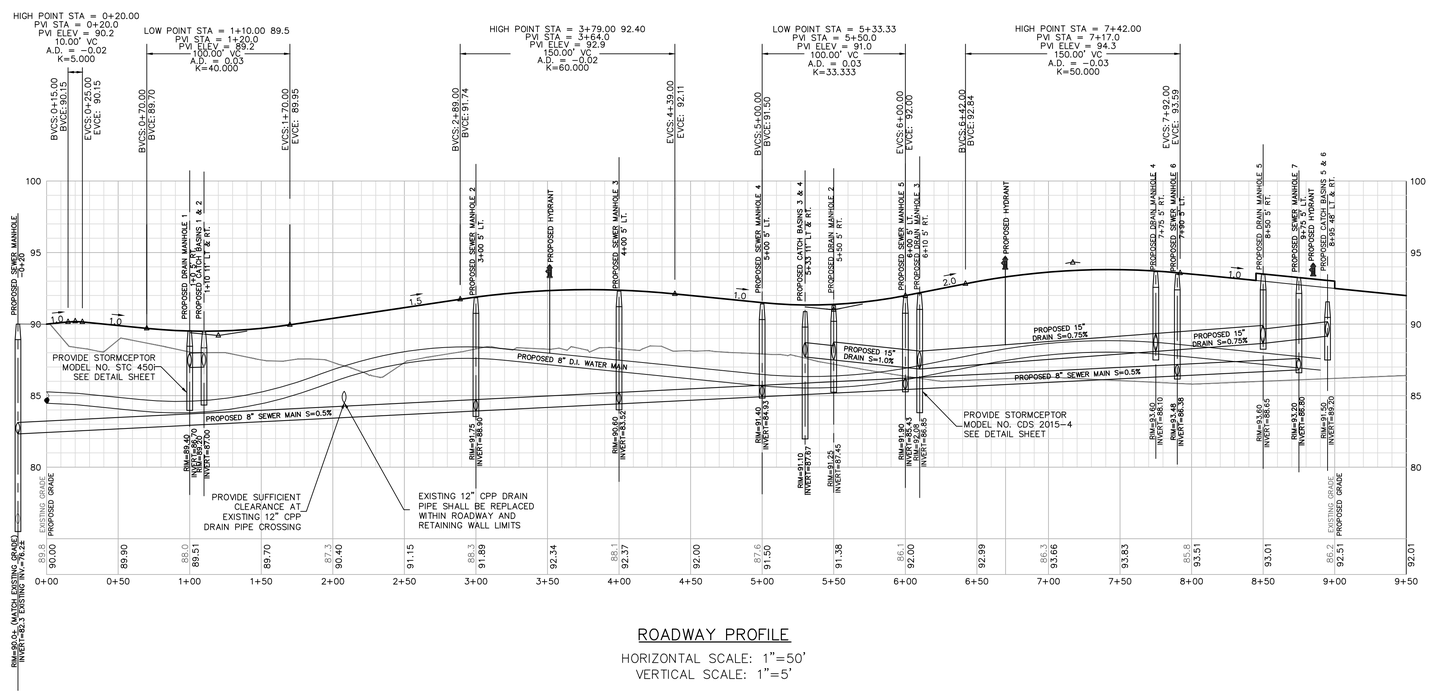

ROADWAY PROFILE
HORIZONTAL SCALE: 1"=50'
VERTICAL SCALE: 1"=5'

DRAWING REVISIONS

ACTION	DATE	DESCRIPTION
7	1/7/22	CONSERVATION REVIEW COMMENTS
6	12/23/21	CONSERVATION REVIEW COMMENTS
5	11/30/21	CONSERVATION REVIEW COMMENTS
4	9/23/21	CONSERVATION REVIEW COMMENTS
3	8/9/21	REVIEW COMMENTS
2	7/15/21	CONSERVATION
1	6/21/21	REVIEW ENGINEER COMMENTS

SURVEY NOTES:

1. LOCUS LIES IN F.I.R.M. ZONE A, AE AND X AS SHOWN ON COMMUNITY PANEL NO. 25023C0181K DATED JULY 6, 2021.

WETLANDS NOTES:

1. RESOURCE AREAS SHOWN HEREON WERE APPROVED BY AN ORDER OF RESOURCE AREA DELINEATION BY THE ROCKLAND CONSERVATION COMMISSION, SE 273-0400 ISSUED ON JANUARY 11, 2019.

SEWER NOTES:

1. PROPOSED SEWER MAIN AND SEWER SERVICES SHALL BE COORDINATED WITH TOWN OF ROCKLAND SEWER DEPARTMENT. CONTRACTOR SHALL STRICTLY ABIDE BY ALL SEWER DEPARTMENT REQUIREMENTS.

2. PROPOSED SEWER LINE AND SEWER COMPONENTS SHALL BE LOCATED A MINIMUM OF 10' FROM AND AT LEAST 18" BELOW WATER SUPPLY LINE. WHEREVER SEWER LINES MUST BE WITHIN 10' OF WATER SUPPLY, WATER LINE SHALL BE SLEEVED.

I CERTIFY THAT THE SURVEY PERFORMED CONFORMS TO THE TECHNICAL AND PROCEDURAL STANDARDS FOR THE PRACTICE OF LAND SURVEYING SET FORTH IN 250 CMR SECTION 6.01 AND 6.02.

I CERTIFY THAT THIS PLAN CONFORMS WITH THE RULES AND REGULATIONS OF THE REGISTRY OF DEEDS AND MASSACHUSETTS LAND COURT.

I CERTIFY THAT THIS PLAN WITH THE WAIVERS HEREIN REQUESTED CONFORMS WITH THE RULES AND REGULATIONS OF THE PLANNING BOARD OF THE TOWN OF ROCKLAND, MASSACHUSETTS UNDER THE SUBDIVISION CONTROL LAW AND ZONING BYLAWS OF THE TOWN OF ROCKLAND.

COMMONWEALTH OF MASSACHUSETTS — BRENDAN P. SULLIVAN — No. 41358 — REGISTERED PROFESSIONAL ENGINEER

COMMONWEALTH OF MASSACHUSETTS — BRENDAN P. SULLIVAN — No. 46922 — REGISTERED PROFESSIONAL LAND SURVEYOR

BRENDAN P. SULLIVAN, P.E., P.L.S. — 1/7/22 DATE

APPROVED BY
ROCKLAND PLANNING BOARD

DATE: _____

SIGNED:

_____

_____

_____

_____

_____

I HEARBY CERTIFY THAT 20 DAYS HAVE ELAPSED SINCE PLANNING BOARD APPROVAL AND THAT NO APPEAL HAS BEEN FILED IN THIS OFFICE.

ROCKLAND TOWN CLERK — *DATE*

ROADWAY LAYOUT AND PROFILE

CAVANARO CONSULTING
687 MAIN STREET
P.O. BOX 5175
NORWELL, MASSACHUSETTS 02061
PHONE: 781.659.8187
FAX: 781.659.8186

CONCORD MEADOWS DEFINITIVE PUD PLAN
365 CONCORD STREET
ROCKLAND, MA 02370

PREPARED FOR:
CONROCK LLC
P.O. BOX 1414
DUXBURY, MA 02331

PROJECT NO. : 19.103	DRAWING NO.
SCALE : AS SHOWN	RLP
DATE : 6/1/21	
DESIGNED BY : CCH	
DRAWN BY : CCH/MCM	SHEET NO. 7 OF 14
CHECKED BY : BPS/JCC	FILENAME: W:\PR\2019\19.103\DWG\DEF.SUB\DEF.ECON.DWG

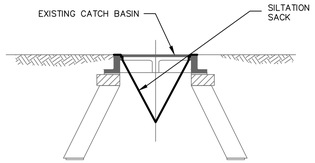

NOT TO SCALE

SILT SACK NOTES:

INSTALL SILTSACK IN ALL CATCH BASINS ADJACENT TO PROJECT VICINITY.

GRATE TO BE PLACED OVER SILTSACK.

SILTSACK SHALL BE INSPECTED PERIODICALLY AND AFTER ALL STORM EVENTS AND CLEANING OR REPLACEMENT SHALL BE PERFORMED PROMPTLY AS NEEDED. MAINTAIN UNTIL UPSTREAM AREAS HAVE BEEN PERMANENTLY STABILIZED.

CATCH BASIN SEDIMENTATION DETAIL

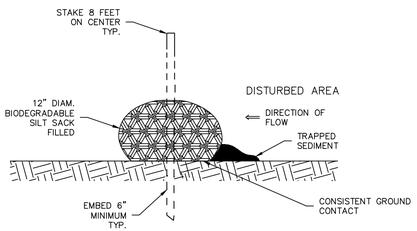

PROPOSED SILT SOCK

NOT TO SCALE

SILT SOCK NOTES:

OVERLAP ENDS 2 FEET STAKED MINIMUM 8 FEET CENTER TO CENTER AND 6" MINIMUM DEPTH.

SILT SOCKS SHALL BE PLACED IN A ROW WITH ENDS LAPPING MINIMUM 2 FEET.

SILT SOCKS SHALL BE SECURELY ANCHORED IN PLACE BY STAKES OR RE-BARS DRIVING EVERY 8 L.F.

INSPECTIONS SHALL BE FREQUENT AND REPAIR OR REPLACEMENT SHALL BE MAKE PROMPTLY AS REQUIRED.

SILT SOCKS SHALL BE REMOVED WHEN THEY HAVE SERVED THEIR USEFULNESS SO AS NOT TO BLOCK OR IMPEDE STORM FLOW OR DRAINAGE.

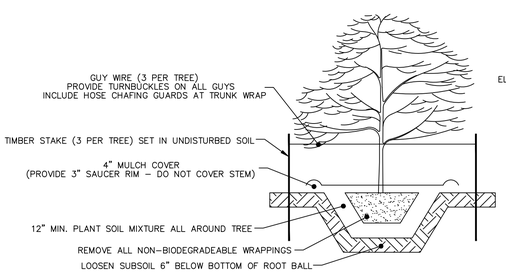

TREE PLANTING DETAIL

NOT TO SCALE

NOTE:

NEW TREES SHOULD ALSO BE SPECIFIED TO HAVE A MINIMUM HEIGHT OF TWELVE FEET WITH EIGHT FOOT HEAD CLEARANCE AND THREE INCH CALIPER AT 42 INCHES ABOVE GROUND.

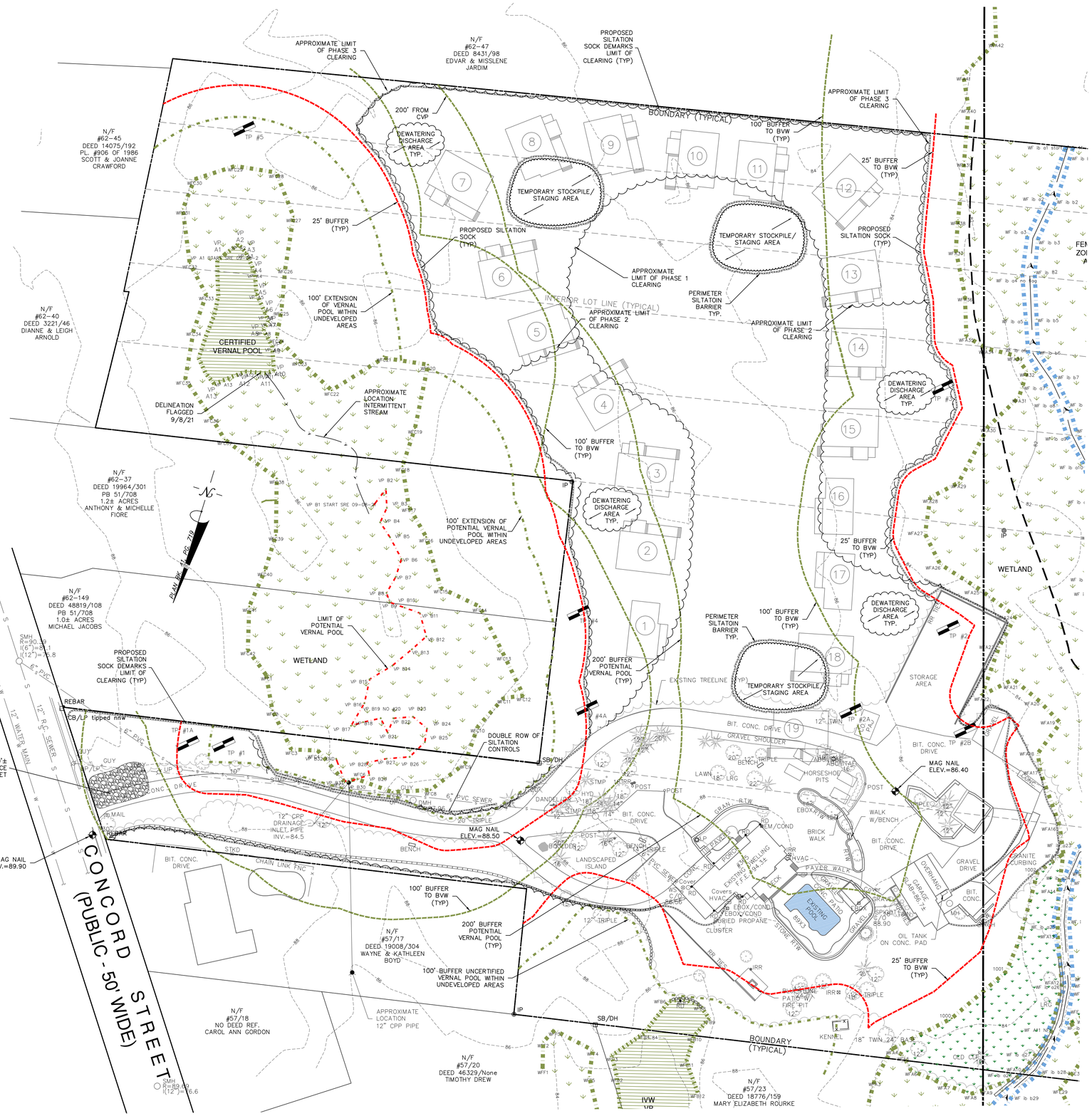

DRAWING REVISIONS		
6	12/23/21	CONSERVATION REVIEW COMMENTS
5	11/30/21	CONSERVATION REVIEW COMMENTS
4	9/23/21	CONSERVATION REVIEW COMMENTS
3	8/9/21	REVIEW COMMENTS
2	7/15/21	CONSERVATION
1	6/21/21	REVIEW ENGINEER COMMENTS
ACTION	**DATE**	**DESCRIPTION**

SURVEY NOTES:

1. LOCUS LIES IN F.I.R.M. ZONE A, AE AND X AS SHOWN ON COMMUNITY PANEL NO. 25023C0181K DATED JULY 6, 2021.

WETLANDS NOTES:

1. RESOURCE AREAS SHOWN HEREON WERE APPROVED BY AN ORDER OF RESOURCE AREA DELINEATION BY THE ROCKLAND CONSERVATION COMMISSION, SE 273-0400 ISSUED ON JANUARY 11, 2019.

GENRAL NOTES:

ALL INFILTRATION/DETENTION BASIN AREAS SHALL BE STAKED TO AVOID HEAVY MACHINERY.

ALL STOCKPILES SHALL HAVE PERIMETER ROW OF SILTATION SOCK 5 FEET OFF TOE OF SLOPE.

I CERTIFY THAT THE SURVEY PERFORMED CONFORMS TO THE TECHNICAL AND PROCEDURAL STANDARDS FOR THE PRACTICE OF LAND SURVEYING SET FORTH IN 250 CMR SECTION 6.01 AND 6.02.

I CERTIFY THAT THIS PLAN CONFORMS WITH THE RULES AND REGULATIONS OF THE REGISTRY OF DEEDS AND MASSACHUSETTS LAND COURT.

I CERTIFY THAT THIS PLAN WITH THE WAIVERS HEREIN REQUESTED CONFORMS WITH THE RULES AND REGULATIONS OF THE PLANNING BOARD OF THE TOWN OF ROCKLAND, MASSACHUSETTS UNDER THE SUBDIVISION CONTROL LAW AND ZONING BYLAWS OF THE TOWN OF ROCKLAND.

COMMONWEALTH OF MASSACHUSETTS BRENDAN P. SULLIVAN No. 41358 REGISTERED PROFESSIONAL ENGINEER

COMMONWEALTH OF MASSACHUSETTS BRENDAN P. SULLIVAN No. 46922 REGISTERED PROFESSIONAL LAND SURVEYOR

BRENDAN P. SULLIVAN, P.E., P.L.S. — 1/7/22 DATE

APPROVED BY ROCKLAND PLANNING BOARD

DATE: _____

SIGNED: _____

I HEARBY CERTIFY THAT 20 DAYS HAVE ELAPSED SINCE PLANNING BOARD APPROVAL AND THAT NO APPEAL HAS BEEN FILED IN THIS OFFICE.

ROCKLAND TOWN CLERK — *DATE*

SCALE: 1" = 40'

0' 20' 40' 80' 120'

EROSION CONTROL

CAVANARO CONSULTING
687 MAIN STREET
P.O. BOX 5175
NORWELL, MASSACHUSETTS 02061
PHONE: 781.659.8187
FAX: 781.659.8186

CONCORD MEADOWS DEFINITIVE PUD PLAN 365 CONCORD STREET ROCKLAND, MA 02370

PREPARED FOR:

CONROCK LLC
P.O. BOX 1414
DUXBURY, MA 02331

PROJECT NO. : 19.103	DRAWING NO.
SCALE : AS SHOWN	ER
DATE : 6/1/21	
DESIGNED BY : CCH	
DRAWN BY : CCH/MCM	SHEET NO. 8 OF 14
CHECKED BY : BPS/JCC	FILENAME: W:\PIR\2019\19.103\DWG\DEF.SUB\DEF.ECON.DWG

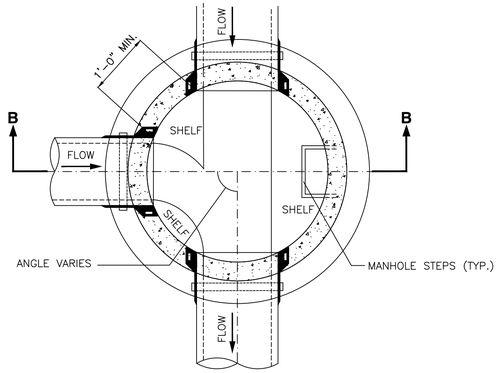

PLAN

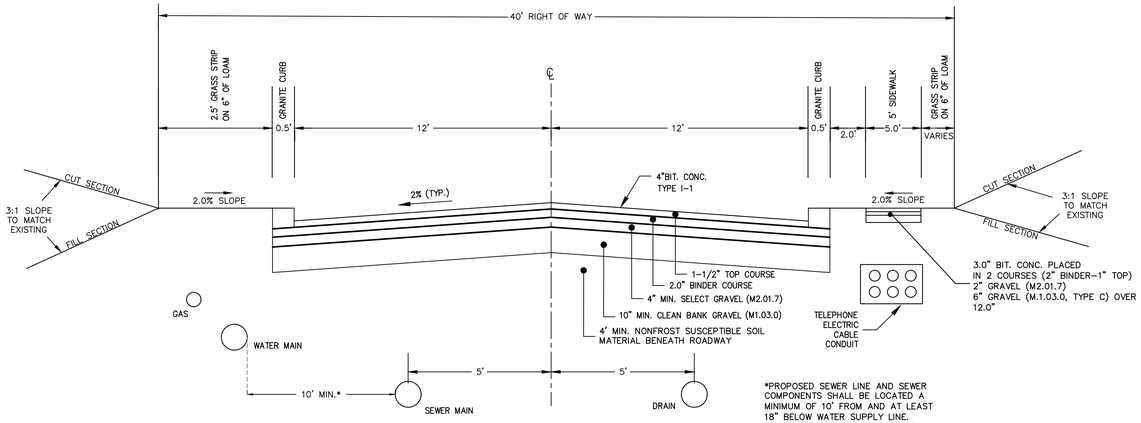

*PROPOSED SEWER LINE AND SEWER COMPONENTS SHALL BE LOCATED A MINIMUM OF 10' FROM AND AT LEAST 18" BELOW WATER SUPPLY LINE. WHEREVER SEWER LINES MUST BE WITHIN 10' OF WATER SUPPLY, WATER LINE SHALL BE SLEEVED.

TYPICAL ROADWAY SECTION

NOT TO SCALE

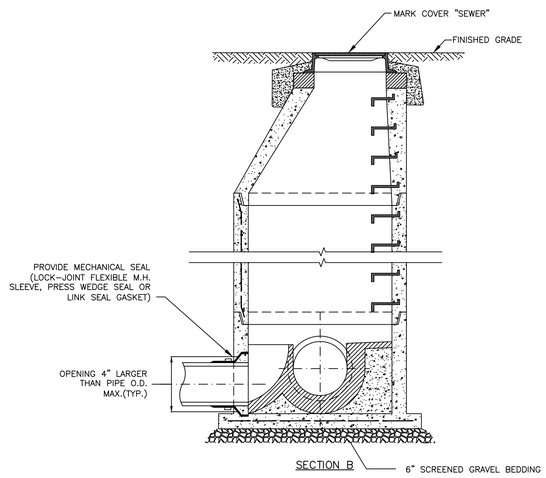

PRECAST CONCRETE SEWER MANHOLE

N.T.S.

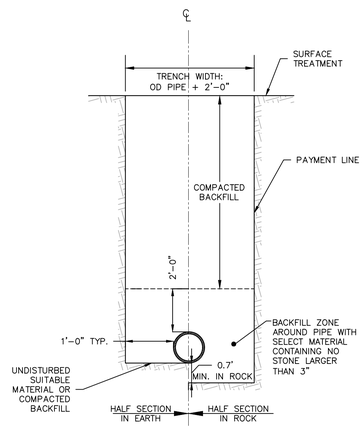

TYPICAL PIPE TRENCH DETAIL

NOT TO SCALE

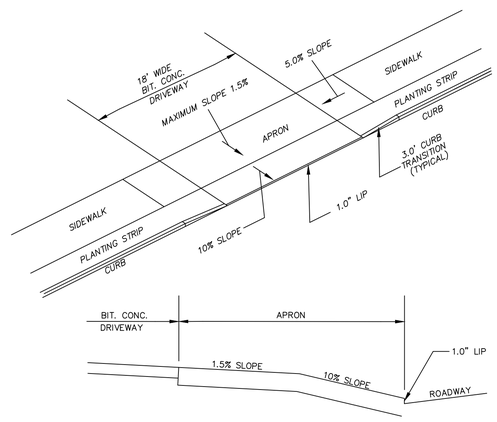

DRIVEWAY TYPICAL DETAIL

NOT TO SCALE

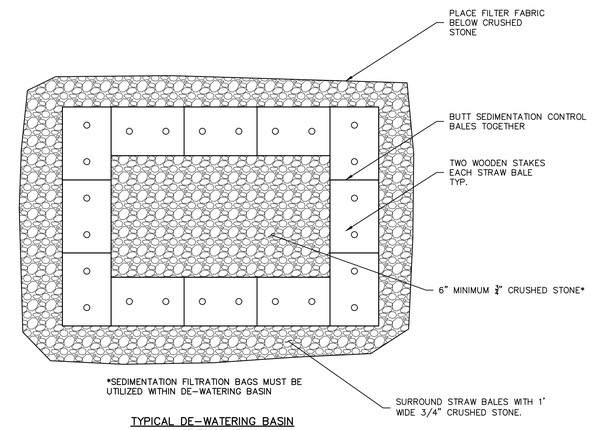

*SEDIMENTATION FILTRATION BAGS MUST BE UTILIZED WITHIN DE-WATERING BASIN

TYPICAL DE-WATERING BASIN

NOT TO SCALE

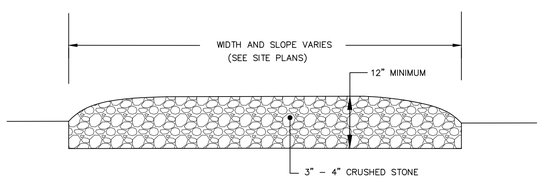

CONSTRUCTION ENTRANCE DETAIL

NOT TO SCALE

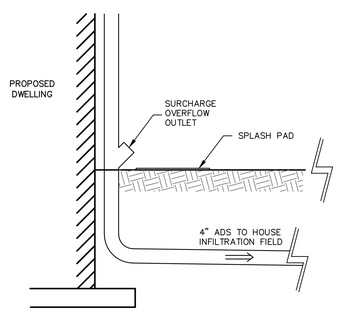

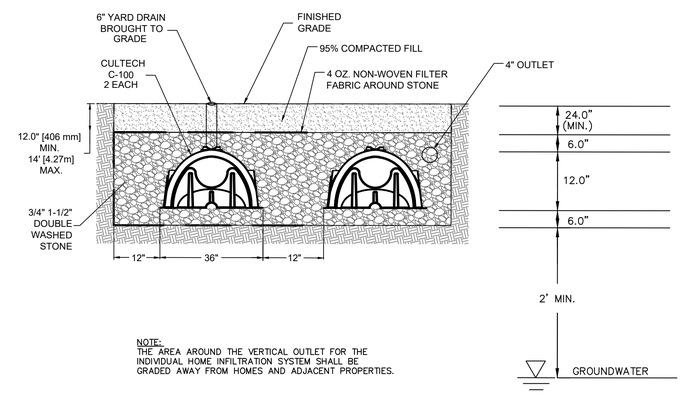

NOTE:
THE AREA AROUND THE VERTICAL OUTLET FOR THE INDIVIDUAL HOME INFILTRATION SYSTEM SHALL BE GRADED AWAY FROM HOMES AND ADJACENT PROPERTIES.

TYPICAL HOUSE INFILTRATION BED – CROSS SECTION

NOT TO SCALE

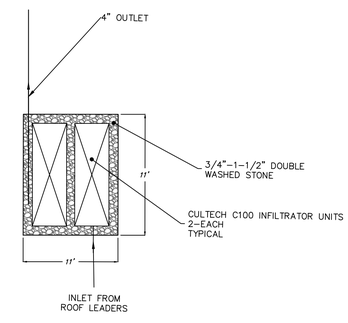

TYPICAL HOUSE INFILTRATION BED-PLAN VIEW

NOT TO SCALE

FOR REGISTRY USE ONLY

DRAWING REVISIONS

ACTION	DATE	DESCRIPTION
6	12/23/21	CONSERVATION REVIEW COMMENTS
5	11/30/21	CONSERVATION REVIEW COMMENTS
4	9/23/21	CONSERVATION REVIEW COMMENTS
3	8/9/21	REVIEW COMMENTS
2	7/15/21	CONSERVATION
1	6/21/21	REVIEW ENGINEER COMMENTS

SURVEY NOTES:

1. LOCUS LIES IN F.I.R.M. ZONE A, AE AND X AS SHOWN ON COMMUNITY PANEL NO. 25023C0181K DATED JULY 6, 2021.

WETLANDS NOTES:

1. RESOURCE AREAS SHOWN HEREON WERE APPROVED BY AN ORDER OF RESOURCE AREA DELINEATION BY THE ROCKLAND CONSERVATION COMMISSION, SE 273-0400 ISSUED ON JANUARY 11, 2019.

I CERTIFY THAT THE SURVEY PERFORMED CONFORMS TO THE TECHNICAL AND PROCEDURAL STANDARDS FOR THE PRACTICE OF LAND SURVEYING SET FORTH IN 250 CMR SECTION 6.01 AND 6.02.

I CERTIFY THAT THIS PLAN CONFORMS WITH THE RULES AND REGULATIONS OF THE REGISTRY OF DEEDS AND MASSACHUSETTS LAND COURT.

I CERTIFY THAT THIS PLAN WITH THE WAIVERS HEREIN REQUESTED CONFORMS WITH THE RULES AND REGULATIONS OF THE PLANNING BOARD OF THE TOWN OF ROCKLAND, MASSACHUSETTS UNDER THE SUBDIVISION CONTROL LAW AND ZONING BYLAWS OF THE TOWN OF ROCKLAND.

COMMONWEALTH OF MASSACHUSETTS BRENDAN P. SULLIVAN No. 41358 REGISTERED PROFESSIONAL ENGINEER

COMMONWEALTH OF MASSACHUSETTS BRENDAN P. SULLIVAN No. 46922 REGISTERED PROFESSIONAL LAND SURVEYOR

BRENDAN P. SULLIVAN, P.E., P.L.S. — 1/7/22 DATE

APPROVED BY ROCKLAND PLANNING BOARD

DATE: _____

SIGNED: _____

I HEARBY CERTIFY THAT 20 DAYS HAVE ELAPSED SINCE PLANNING BOARD APPROVAL AND THAT NO APPEAL HAS BEEN FILED IN THIS OFFICE.

ROCKLAND TOWN CLERK — *DATE*

SCALE: 1" = 40'

0' 20' 40' 80' 120'

DETAIL SHEET 1

CAVANARO CONSULTING
687 MAIN STREET
P.O. BOX 5175
NORWELL, MASSACHUSETTS 02061
PHONE: 781.659.8187
FAX: 781.659.8186

CONCORD MEADOWS
DEFINITIVE PUD PLAN
365 CONCORD STREET
ROCKLAND, MA 02370

PREPARED FOR:
CONROCK LLC
P.O. BOX 1414
DUXBURY, MA 02331

PROJECT NO. : 19.103	DRAWING NO.
SCALE : AS SHOWN	DT1
DATE : 6/1/21	
DESIGNED BY : CCH	
DRAWN BY : CCH/MCM	SHEET NO. 9 OF 14
CHECKED BY : BPS/JCC	FILENAME: W:\PR\2019\19.103\DWG\DEF.SUB\DEF.ECON.DWG

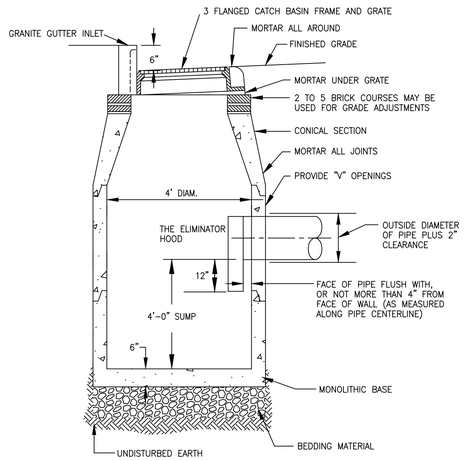

CATCH BASIN NOTES:

1. DRAINAGE STRUCTURES SHALL BE CONSTRUCTED IN ACCORDANCE WITH THE LATEST REVISIONS OF MASSDOT STANDARD DETAILS AND MHD SPECIFICATIONS.

DEEP SUMP CATCH BASIN

NOT TO SCALE

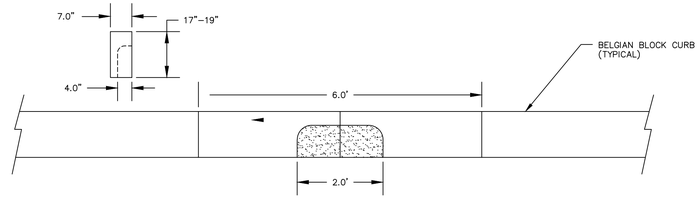

GRANITE CURB INLET DETAIL

NOT TO SCALE
TO BE LOCATED AT EACH CATCH BASIN LOCATION

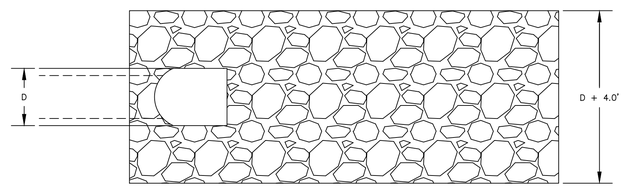

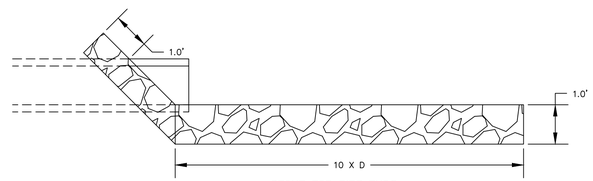

STONE FOR PIPE ENDS

NOT TO SCALE

NOTES:

1. RIP RAP SHALL CONSIST OF 8"–15" ANGULAR STONE.

2. REFER TO MASS HIGHWAY "STONE FOR PIPE END" SPECIFICATIONS DWG. NO. 206.7.0

3. SCOUR PROTECTION SHALL BE PROVIDED FOR A DISTANCE NOT LESS THAN 6 NOMINAL PIPE DIAMETERS FROM THE PIPE END. SCOUR PROTECTION SHALL BE COMPOSED OF A LAYER OF STONE 12" IN THISCKNESS OR MORE PLACED UPON A GRAVEL BED 6" IN THICKNESS. THE STONES SHALL BE SIZED SO THAT NOT LESS THAN 60% SHALL HAVE ONE DIMENSION 12" OR MORE. THE STONES AFTER BEING LAID SHALL BE CAREFULLY CHINKED BY HAND TO MAKE A REASONABLY SMOOTH AND SHAPED SURFACE.

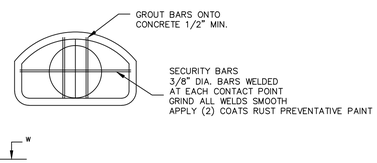

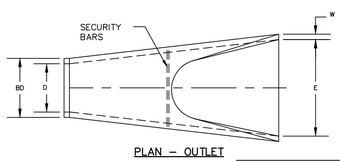

PLAN – OUTLET

NOT TO SCALE

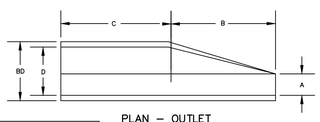

PLAN – OUTLET

NOT TO SCALE

FLARED END DIMENSIONS							
DIAMETER	A	B	BD	C	D	E	W
12"	4"	2'	1.3'	4'	1.0'	2.0'	2"
18"	9.0"	3.3'	1.9'	2.8'	1.5'	3.0'	2.5"

NOTES:

1. FLARED END SECTION MUST COMPLY WITH MASS HIGHWAY SPECIFICATIONS FOR MATERIAL AND CONSTRUCTION OF FLARED END SECTIONS.

PRECAST CONCRETE FLARED END DETAIL

NOT TO SCALE

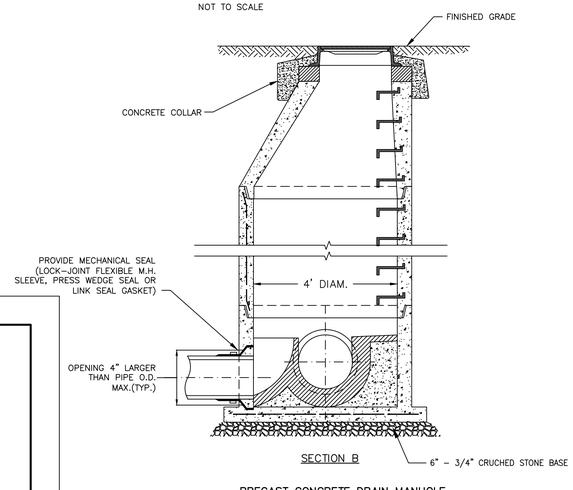

PRECAST CONCRETE DRAIN MANHOLE

NOT TO SCALE

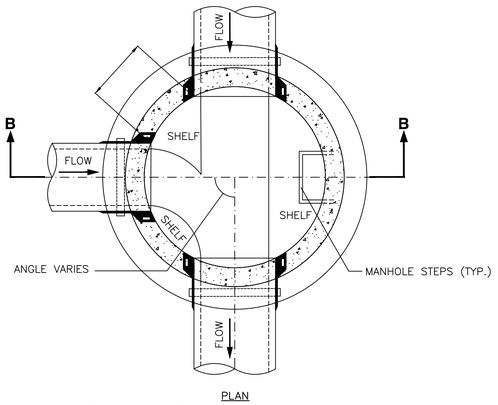

PLAN

DRAINAGE MANHOLE NOTES:

1. DRAINAGE STRUCTURES SHALL BE CONSTRUCTED IN ACCORDANCE WITH THE LATEST REVISIONS OF MASSDOT STANDARD DETAILS AND MHD SPECIFICATIONS. FIELD CHIPPING OR CUTTING OF PRECAST CONCRETE MANHOLES SHALL BE WITNESSED AND APPROVED BY THE BOARD.

2. MANHOLE COVERS SHALL HAVE THE WORD "DRAIN" IMPRINTED THEREON WITH LETTERS 3 INCHES HIGH.

DRAINAGE DETAILS

HYDRANT NOTES:

1. CONCRETE THRUST BLOCK TO BE USED ONLY WHERE IT WILL BEAR ON UNDISTURBED EARTH.

2. USE RESTRAINED JOINT FITTINGS (MEGALUG OR APPROVED EQUAL) WHERE CONCRETE THRUST BLOCK IS UNACCEPTABLE.

3. USE MUELLER FITTINGS AND HYDRANTS OR APPROVED EQUAL.

4. CONTRACTOR SHALL ADHERE TO ABINGTON/ROCKLAND WATER DEPARTMENT REQUIREMENTS.

5. ALL WATER MAIN MATERIALS SHALL COMPLY WITH THE SPECIFICATIONS OF THE ABINGTON/ROCKLAND JOINT WATER WORKS (ARJWW).

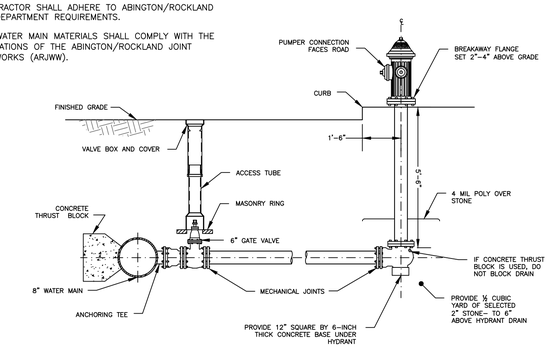

TYPICAL HYDRANT BRANCH ASSEMBLY

NOT TO SCALE

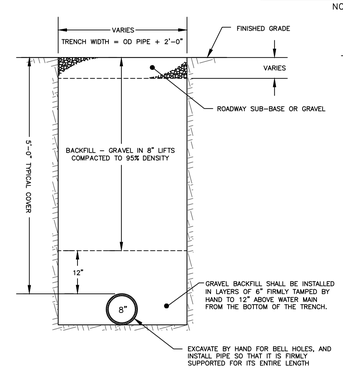

TYPICAL WATER MAIN TRENCH DETAIL

NOT TO SCALE

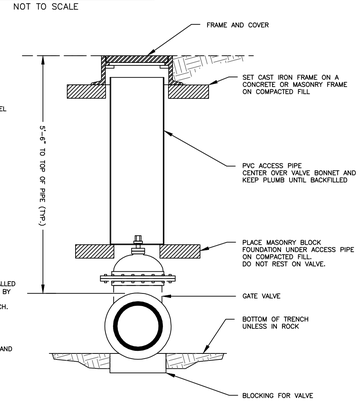

TYPICAL WATER GATE VALVE

NOT TO SCALE

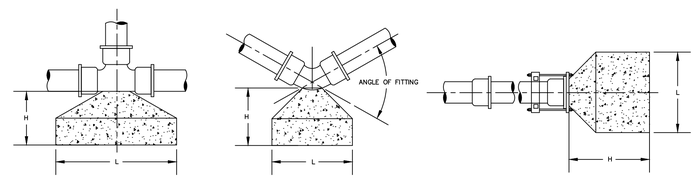

PLAN – TEE | PLAN – BEND | PLAN – DEAD END

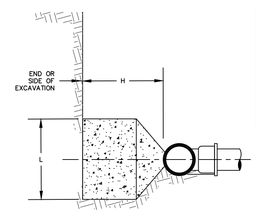

TYPICAL SECTION
(FOR TEES, BENDS & DEAD ENDS)

THRUST BLOCK DIMENSIONS										
DIAMETER	C TEE	B	1/4 BEND		1/8 BEND		1/16 BEND		DEAD END	
D	H	L	H	L	H	L	H	L	H	L
8"	3'–0"	3'–0"	2'–0"	2'–0"	1'–6"	1'–6"	1'–6"	1'–6"	3'–0"	3'–0"
6"	1'–2"	1'–2"	1'–3"	1'–3"	1'–0"	1'–0"	1'–0"	1'–0"	2'–0"	2'–0"

THRUST BLOCK NOTES:

1. CONCRETE SHALL BE 3,000 PSI
2. THRUST BLOCKS SHALL BEAR ON UNDISTURBED EARTH.
3. PIPE JOINTS SHALL NOT BE BLOCKED BY CEMENT.
4. DIMENSIONS SHOWN ARE MINIMUM DISTANCES.
5. GATE VALVES SHALL BE SET ON CONCRETE OR BLOCKING APPROVED BY ENGINEER.

CONCRETE THRUST BLOCKS

NOT TO SCALE

WATER LINE DETAILS

FOR REGISTRY USE ONLY

DRAWING REVISIONS		
6	12/23/21	CONSERVATION REVIEW COMMENTS
5	11/30/21	CONSERVATION REVIEW COMMENTS
4	9/23/21	CONSERVATION REVIEW COMMENTS
3	8/9/21	REVIEW COMMENTS
2	7/15/21	CONSERVATION
1	6/21/21	REVIEW ENGINEER COMMENTS
ACTION	DATE	DESCRIPTION

SURVEY NOTES:

1. LOCUS LIES IN F.I.R.M. ZONE A, AE AND X AS SHOWN ON COMMUNITY PANEL NO. 25023C0181K DATED JULY 6, 2021.

WETLANDS NOTES:

1. RESOURCE AREAS SHOWN HEREON WERE APPROVED BY AN ORDER OF RESOURCE AREA DELINEATION BY THE ROCKLAND CONSERVATION COMMISSION, SE 273–0400 ISSUED ON JANUARY 11, 2019.

I CERTIFY THAT THE SURVEY PERFORMED CONFORMS TO THE TECHNICAL AND PROCEDURAL STANDARDS FOR THE PRACTICE OF LAND SURVEYING SET FORTH IN 250 CMR SECTION 6.01 AND 6.02.

I CERTIFY THAT THIS PLAN CONFORMS WITH THE RULES AND REGULATIONS OF THE REGISTRY OF DEEDS AND MASSACHUSETTS LAND COURT.

I CERTIFY THAT THIS PLAN WITH THE WAIVERS HEREIN REQUESTED CONFORMS WITH THE RULES AND REGULATIONS OF THE PLANNING BOARD OF THE TOWN OF ROCKLAND, MASSACHUSETTS UNDER THE SUBDIVISION CONTROL LAW AND ZONING BYLAWS OF THE TOWN OF ROCKLAND.

COMMONWEALTH OF MASSACHUSETTS BRENDAN P. SULLIVAN No. 41358 REGISTERED PROFESSIONAL ENGINEER

COMMONWEALTH OF MASSACHUSETTS BRENDAN P. SULLIVAN No. 46922 REGISTERED PROFESSIONAL LAND SURVEYOR

BRENDAN P. SULLIVAN, P.E., P.L.S. — 1/7/22 DATE

APPROVED BY
ROCKLAND PLANNING BOARD

DATE: _____

SIGNED:

_____ ROCKLAND TOWN CLERK — _____ DATE

I HEARBY CERTIFY THAT 20 DAYS HAVE ELAPSED SINCE PLANNING BOARD APPROVAL AND THAT NO APPEAL HAS BEEN FILED IN THIS OFFICE.

DETAIL SHEET 2

CAVANARO CONSULTING
687 MAIN STREET
P.O. BOX 5175
NORWELL, MASSACHUSETTS 02061
PHONE: 781.659.8187
FAX: 781.659.8186

CONCORD MEADOWS
DEFINITIVE PUD PLAN
365 CONCORD STREET
ROCKLAND, MA 02370

PREPARED FOR:
CONROCK LLC
P.O. BOX 1414
DUXBURY, MA 02331

PROJECT NO. : 19.103	DRAWING NO.
SCALE : AS SHOWN	DT2
DATE : 6/1/21	
DESIGNED BY : CCH	
DRAWN BY : CCH/MCM	SHEET NO. 10 OF 14
CHECKED BY : BPS/JCC	FILENAME: W:\PR\2019\19.103\DWG\DEF.SUB\DEF.ECON.DWG

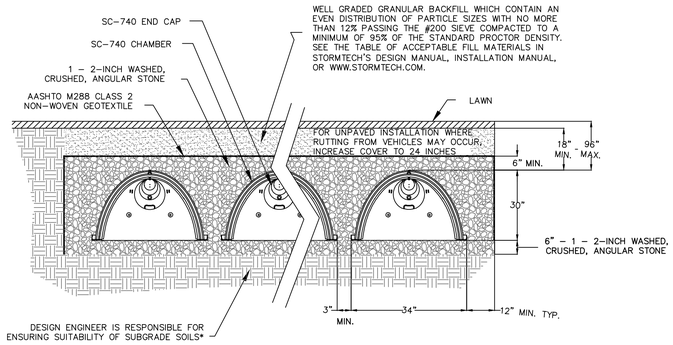

STORMTECH SC-310-3 CHAMBER SYSTEM
TYPICAL CROSS SECTION DETAIL
NOT TO SCALE

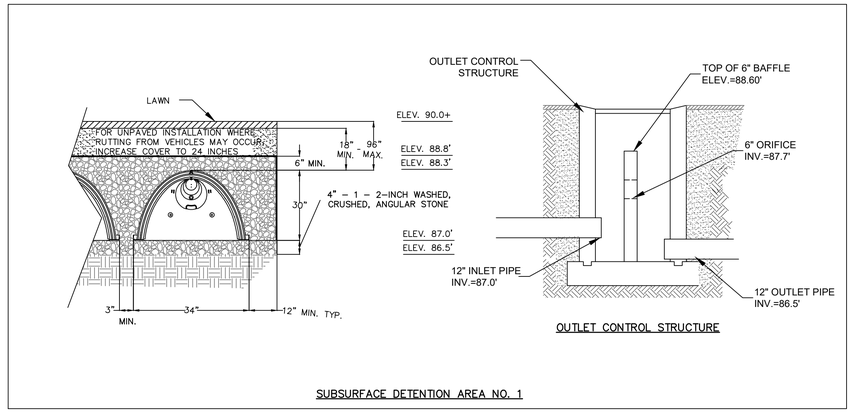

SUBSURFACE DETENTION AREA NO. 1

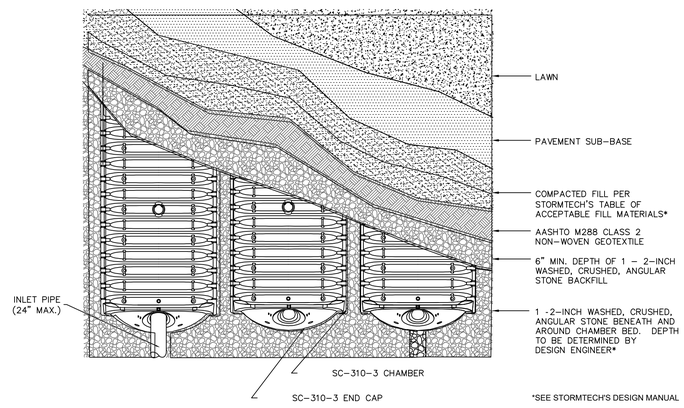

STORMTECH SC-310-3 CHAMBER SYSTEM
PLAN VIEW DETAIL
NOT TO SCALE

INFILTRATION FIELD 1 – DETAILS
NOT TO SCALE

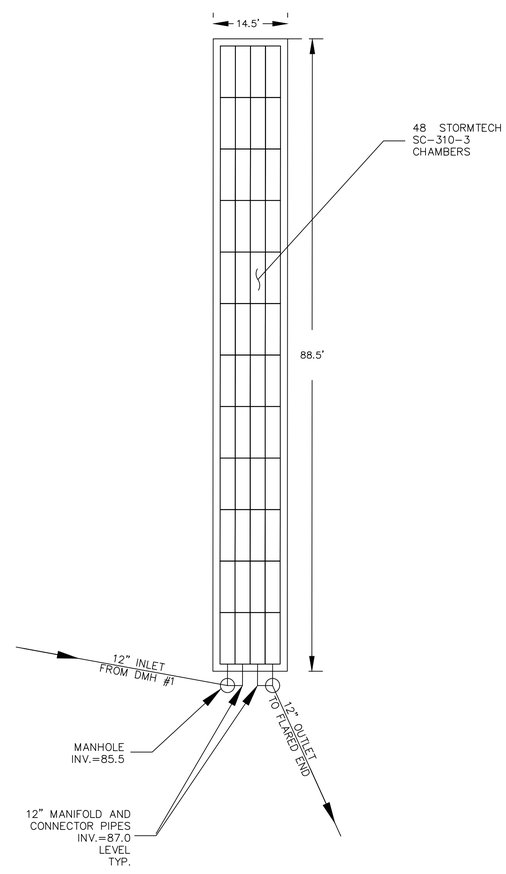

Rinker MATERIALS — Concrete Pipe Division

Stormceptor® Overview

The Stormceptor System is a water quality device used to remove total suspended solids (TSS) and free oil (TPH) efficiently from stormwater. Stormceptor takes the place of a conventional manhole or inlet structure within a storm drain system.

The Stormceptor will capture the majority of the pollutants which are carried in the initial flows of the stormwater. A key advantage of Stormceptor compared to other water quality controls in a storm sewer is the patented internal by-pass which prevents the re-suspension and scouring of captured material during infrequent high flow conditions.

Stormceptor has two components:
- lower chamber
- upper chamber

Stormwater flows into the Stormceptor via the storm sewer pipe. Average flows are diverted into the lower chamber by a weir and drop pipe arrangement (Figure 1). The drop pipe is configured to discharge water tangentially along the lower chamber wall. Water flows through the lower chamber to the outlet pipe, which is submerged similar to the drop inlet pipe. Water flows up through the outlet pipe based on the head at the inlet weir, and is discharged back into the upper chamber downstream of the weir. The downstream section of the upper chamber is connected to the outlet sewer pipe.

Oil and other liquids with a specific gravity less than water will rise in the lower chamber and become trapped since the outlet pipe is submerged. Sediment will settle to the bottom of the chamber by gravitational forces. The circular design of the lower chamber is critical to prevent turbulent eddy currents and to promote settling.

During high flow conditions, stormwater in the upper chamber will overtop the weir and be conveyed to the outlet sewer directly (Figure 2). Water, which overflows the weir, creates a backwater effect on the outlet pipe (head stabilization between the inlet drop pipe and outlet riser pipe) ensuring that excessive flow will not be forced into the lower chamber which could scour or re-suspend the captured material. The by-pass is an integral part of the Stormceptor since other oil / grit separators have been noted to scour during high flow conditions (Schueler and Shepp, 1993).

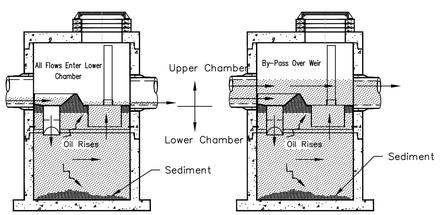

Figure 1
Stormceptor Operation During Average Flow Conditions

Figure 2
Stormceptor Operation During High Flow Conditions

STORMCEPTOR MODEL NO. STC 450i
NOT TO SCALE

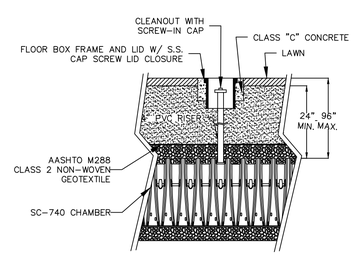

STORMTECH SC-310-3 CHAMBER SYSTEM
INSPECTION PORT DETAIL
NOT TO SCALE

DRAWING REVISIONS

ACTION	DATE	DESCRIPTION
7	1/7/22	CONSERVATION REVIEW COMMENTS
6	12/23/21	CONSERVATION REVIEW COMMENTS
5	11/30/21	CONSERVATION REVIEW COMMENTS
4	9/23/21	CONSERVATION REVIEW COMMENTS
3	8/9/21	REVIEW COMMENTS
2	7/15/21	CONSERVATION
1	6/21/21	REVIEW ENGINEER COMMENTS

SURVEY NOTES:

1. LOCUS LIES IN F.I.R.M. ZONE A, AE AND X AS SHOWN ON COMMUNITY PANEL NO. 25023C0181K DATED JULY 6, 2021.

WETLANDS NOTES:

1. RESOURCE AREAS SHOWN HEREON WERE APPROVED BY AN ORDER OF RESOURCE AREA DELINEATION BY THE ROCKLAND CONSERVATION COMMISSION, SE 273-0400 ISSUED ON JANUARY 11, 2019.

I CERTIFY THAT THE SURVEY PERFORMED CONFORMS TO THE TECHNICAL AND PROCEDURAL STANDARDS FOR THE PRACTICE OF LAND SURVEYING SET FORTH IN 250 CMR SECTION 6.01 AND 6.02.

I CERTIFY THAT THIS PLAN CONFORMS WITH THE RULES AND REGULATIONS OF THE REGISTRY OF DEEDS AND MASSACHUSETTS LAND COURT.

I CERTIFY THAT THIS PLAN WITH THE WAIVERS HEREIN REQUESTED CONFORMS WITH THE RULES AND REGULATIONS OF THE PLANNING BOARD OF THE TOWN OF ROCKLAND, MASSACHUSETTS UNDER THE SUBDIVISION CONTROL LAW AND ZONING BYLAWS OF THE TOWN OF ROCKLAND.

COMMONWEALTH OF MASSACHUSETTS — BRENDAN P. SULLIVAN — No. 41358 — REGISTERED PROFESSIONAL ENGINEER

COMMONWEALTH OF MASSACHUSETTS — BRENDAN P. SULLIVAN — No. 46922 — REGISTERED PROFESSIONAL LAND SURVEYOR

BRENDAN P. SULLIVAN, P.E., P.L.S. — 1/7/22 DATE

APPROVED BY
ROCKLAND PLANNING BOARD

DATE: _____

SIGNED:

_____

I HEARBY CERTIFY THAT 20 DAYS HAVE ELAPSED SINCE PLANNING BOARD APPROVAL AND THAT NO APPEAL HAS BEEN FILED IN THIS OFFICE.

ROCKLAND TOWN CLERK — *DATE*

DETAIL SHEET 3

CAVANARO CONSULTING
687 MAIN STREET
P.O. BOX 5175
NORWELL, MASSACHUSETTS 02061
PHONE: 781.659.8187
FAX: 781.659.8186

CONCORD MEADOWS DEFINITIVE PUD PLAN
365 CONCORD STREET
ROCKLAND, MA 02370

PREPARED FOR:
CONROCK LLC
P.O. BOX 1414
DUXBURY, MA 02331

PROJECT NO. : 19.103	DRAWING NO.
SCALE : AS SHOWN	DT3
DATE : 6/1/21	
DESIGNED BY : CCH	
DRAWN BY : CCH/MCM	SHEET NO. 11 OF 14
CHECKED BY : BPS/JCC	FILENAME: W:\PR\2019\19.103\DWG\DEF.SUB\DEF.ECON.DWG

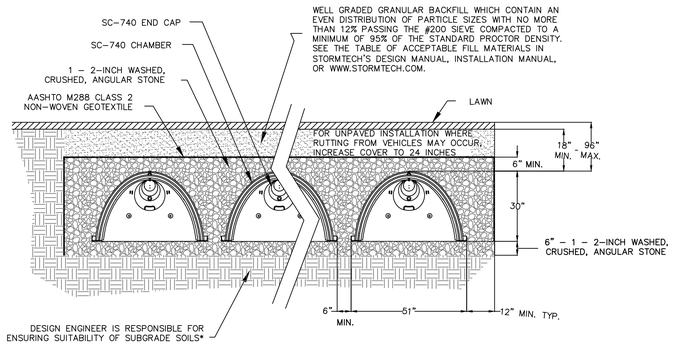

STORMTECH SC-740 CHAMBER SYSTEM
TYPICAL CROSS SECTION DETAIL
NOT TO SCALE

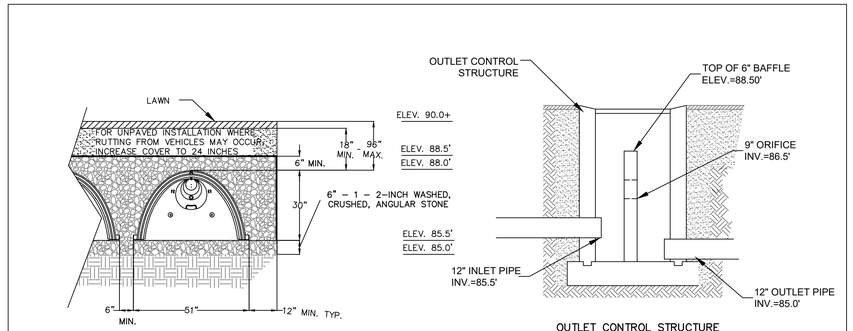

SUBSURFACE DETENTION AREA NO. 1

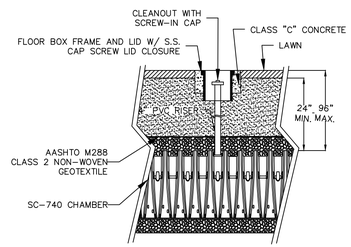

STORMTECH SC-740 CHAMBER SYSTEM
INSPECTION PORT DETAIL
NOT TO SCALE

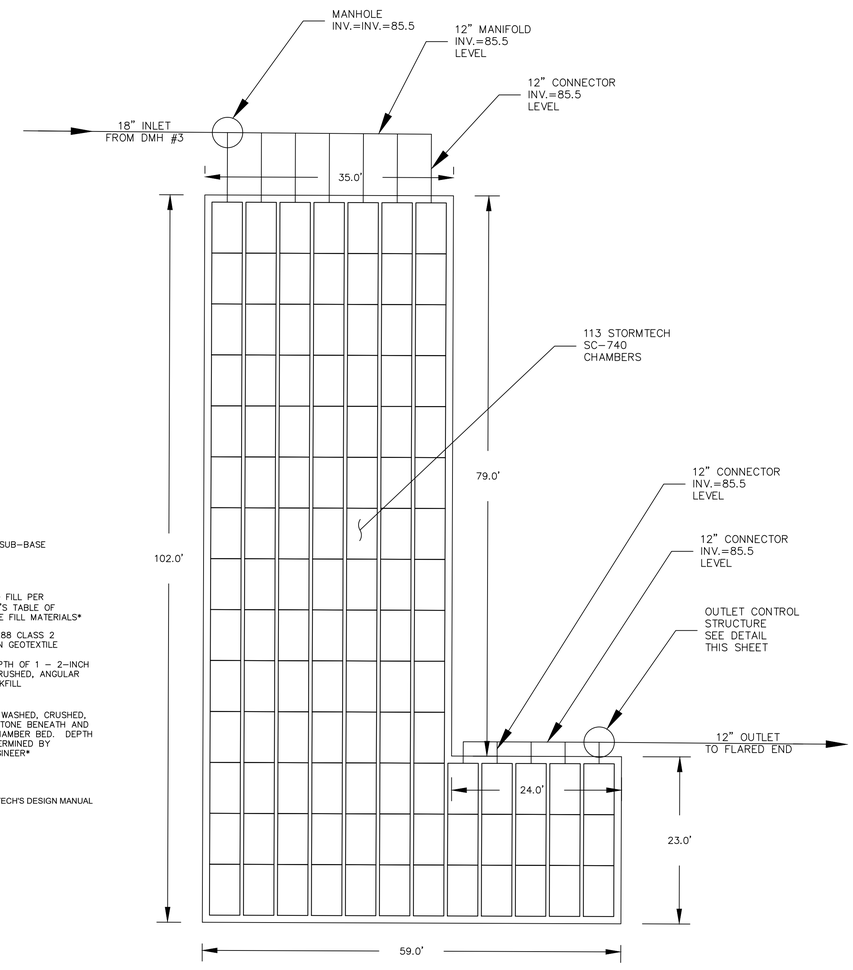

Rinker MATERIALS — Concrete Pipe Division

Stormceptor® Overview

The Stormceptor System is a water quality device used to remove total suspended solids (TSS) and free oil (TPH) efficiently from stormwater. Stormceptor takes the place of a conventional manhole or inlet structure within a storm drain system.

The Stormceptor will capture the majority of the pollutants which are carried in the initial flows of the stormwater. A key advantage of Stormceptor compared to other water quality controls in a storm sewer is the patented internal by-pass which prevents the re-suspension and scouring of captured material during infrequent high flow conditions.

Stormceptor has two components:

- lower chamber
- upper chamber

Stormwater flows into the Stormceptor via the storm sewer pipe. Average flows are diverted into the lower chamber by a weir and drop pipe arrangement (Figure 1). The drop pipe is configured to discharge water tangentially along the lower chamber wall. Water flows through the lower chamber to the outlet pipe, which is submerged similar to the drop inlet pipe. Water flows up through the outlet pipe based on the head at the inlet weir, and is discharged back into the upper chamber downstream of the weir. The downstream section of the upper chamber is connected to the outlet sewer pipe.

Oil and other liquids with a specific gravity less than water will rise in the lower chamber and become trapped since the outlet pipe is submerged. Sediment will settle to the bottom of the chamber by gravitational forces. The circular design of the lower chamber is critical to prevent turbulent eddy currents and to promote settling.

During high flow conditions, stormwater in the upper chamber will overtop the weir and be conveyed to the outlet sewer directly (Figure 2). Water, which overflows the weir, creates a backwater effect on the outlet pipe (head stabilization between the inlet drop pipe and outlet riser pipe) ensuring that excessive flow will not be forced into the lower chamber which could scour or re-suspend the captured material. The by-pass is an integral part of the Stormceptor since other oil / grit separators have been noted to scour during high flow conditions (Schueler and Shepp, 1993).

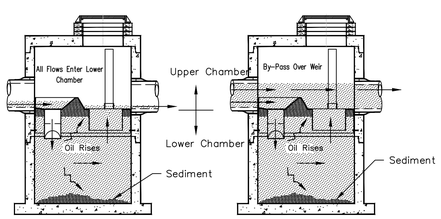

Figure 1
Stormceptor Operation During Average Flow Conditions

Figure 2
Stormceptor Operation During High Flow Conditions

STORMCEPTOR MODEL NO. CDS 2015-4
NOT TO SCALE

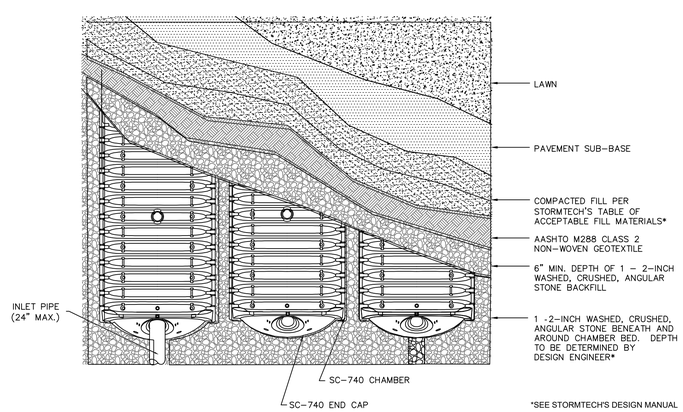

STORMTECH SC-740 CHAMBER SYSTEM
PLAN VIEW DETAIL
NOT TO SCALE

INFILTRATION FIELD 2 – DETAILS
NOT TO SCALE

DRAWING REVISIONS

ACTION	DATE	DESCRIPTION
7	1/7/22	CONSERVATION REVIEW COMMENTS
6	12/23/21	CONSERVATION REVIEW COMMENTS
5	11/30/21	CONSERVATION REVIEW COMMENTS
4	9/23/21	CONSERVATION REVIEW COMMENTS
3	8/9/21	REVIEW COMMENTS
2	7/15/21	CONSERVATION
1	6/21/21	REVIEW ENGINEER COMMENTS

SURVEY NOTES:

1. LOCUS LIES IN F.I.R.M. ZONE A, AE AND X AS SHOWN ON COMMUNITY PANEL NO. 25023C0181K DATED JULY 6, 2021.

WETLANDS NOTES:

1. RESOURCE AREAS SHOWN HEREON WERE APPROVED BY AN ORDER OF RESOURCE AREA DELINEATION BY THE ROCKLAND CONSERVATION COMMISSION, SE 273-0400 ISSUED ON JANUARY 11, 2019.

I CERTIFY THAT THE SURVEY PERFORMED CONFORMS TO THE TECHNICAL AND PROCEDURAL STANDARDS FOR THE PRACTICE OF LAND SURVEYING SET FORTH IN 250 CMR SECTION 6.01 AND 6.02.

I CERTIFY THAT THIS PLAN CONFORMS WITH THE RULES AND REGULATIONS OF THE REGISTRY OF DEEDS AND MASSACHUSETTS LAND COURT.

I CERTIFY THAT THIS PLAN WITH THE WAIVERS HEREIN REQUESTED CONFORMS WITH THE RULES AND REGULATIONS OF THE PLANNING BOARD OF THE TOWN OF ROCKLAND, MASSACHUSETTS UNDER THE SUBDIVISION CONTROL LAW AND ZONING BYLAWS OF THE TOWN OF ROCKLAND.

COMMONWEALTH OF MASSACHUSETTS — BRENDAN P. SULLIVAN — No. 41358 — REGISTERED PROFESSIONAL ENGINEER

COMMONWEALTH OF MASSACHUSETTS — BRENDAN P. SULLIVAN — No. 46922 — REGISTERED PROFESSIONAL LAND SURVEYOR

BRENDAN P. SULLIVAN, P.E., P.L.S. — 1/7/22 DATE

APPROVED BY
ROCKLAND PLANNING BOARD

DATE: _____

SIGNED:

I HEARBY CERTIFY THAT 20 DAYS HAVE ELAPSED SINCE PLANNING BOARD APPROVAL AND THAT NO APPEAL HAS BEEN FILED IN THIS OFFICE.

ROCKLAND TOWN CLERK — *DATE*

DETAIL SHEET 4

CAVANARO CONSULTING
687 MAIN STREET
P.O. BOX 5175
NORWELL, MASSACHUSETTS 02061
PHONE: 781.659.8187
FAX: 781.659.8186

CONCORD MEADOWS
DEFINITIVE PUD PLAN
365 CONCORD STREET
ROCKLAND, MA 02370

PREPARED FOR:
CONROCK LLC
P.O. BOX 1414
DUXBURY, MA 02331

PROJECT NO. : 19.103	DRAWING NO.
SCALE : AS SHOWN	DT4
DATE : 6/1/21	
DESIGNED BY : CCH	
DRAWN BY : CCH/MCM	SHEET NO. 12 OF 14
CHECKED BY : BPS/JCC	FILENAME: W:\PR\2019\19.103\DWG\DEF.SUB\DEF.ECON.DWG

CONSTRUCTION PERIOD STORMWATER OPERATION AND MAINTENANCE PLAN AND CONSTRUCTION SEQUENCING

PROPOSED RESIDENTIAL DEVELOPMENT
365 CONCORD STREET – ROCKLAND, MA 02370
STORMWATER MANAGEMENT SYSTEM'S OWNER: CONROCK LLC
SYSTEM OWNER'S ADDRESS: 365 CONCORD STREET, ROCKLAND, MA 02370
PARTY RESPONSIBLE FOR OPERATIONS AND MAINTENANCE: OWNERS OF 365 CONCORD STREET, ROCKLAND, MA 02370

AS PART OF ANY INFRASTRUCTURE IMPROVEMENT THE SYSTEM MUST BE MAINTAINED IN ORDER TO WORK PROPERLY. THE FOLLOWING IS AN OPERATION AND MAINTENANCE PLAN TO FOLLOW PRIOR TO AND WHILE CONSTRUCTION ACTIVITIES ARE TAKING PLACE.

EMERGENCY CONTACT INFORMATION:

MATTHEW DACEY:
P.O. BOX 1414
DUXBURY, MA 02331
TELEPHONE: 781–585–4114
EMERGENCY TELEPHONE: 781–424–5290 (24/7 EMERGENCY RESPONSE)
EMAIL: MDACEY@CHAMPIONBUILDERS.COM

CONSTRUCTION SEQUENCING:

THE FOLLOWING SECTION PROVIDES CONSTRUCTION DETAILS AND HIGHLIGHTS THE CONSTRUCTION SEQUENCE AND TIMING OF EARTH MOVING ACTIVITIES.

1 INSTALLATION OF EROSION CONTROLS

EROSION AND SEDIMENTATION CONTROLS (SILT FENCE AND SILT SOCK) WILL BE INSTALLED WHERE NEEDED AND INSPECTED AT THE LIMITS OF THE WORK AREA PRIOR TO THE COMMENCEMENT OF EARTH MOVING ACTIVITIES.

2 CLEARING

THE PROJECT AREA WILL BE CLEARED OF DEBRIS AND BOULDERS. MATERIALS REMOVED FROM THE SITE WILL BE TRANSPORTED TO AN APPROPRIATE FACILITY OR WILL BE DISPOSED OF PROPERLY. NO LARGE BOULDERS WILL BE BURIED ON THE SITE. ALL CLEARED VEGETATION WILL BE REMOVED FROM THE PROJECT SITE OR MULCHED AND STOCKPILED FOR FUTURE USE ON THE SITE.

CONSTRUCTION SEQUENCING:

PHASE 1 – CLEARING TO PHASE 1 LIMITS TO INCLUDE ENTIRE ROADWAY AND BOTH INFILTRATION PONDS.

PHASE 2 – CLEARING TO PAHSE 2 LIMITS TO INCLUDE CLEARING FOR CONSTRUCTION OF HOUSE LOTS 1 THRU 4 AND 14 THRU 19.

PHASE 3 – CLEARING TO PHASE 3 LIMITS TO INCLUDE CLEARING FRO CONSTRUCTION OF REMAINING HOUSE LOTS.

3 ROUGH GRADING

DURING THIS PHASE OF CONSTRUCTION, ROUGH GRADES WILL BE ESTABLISHED FOR THE PROJECT SITE. IF SUITABLE TOPSOIL IS FOUND, IT WILL BE REMOVED AND STOCKPILED IN AN UPLAND AREA OUTSIDE OF THE 100–FOOT BUFFER ZONE OF IDENTIFIED WETLANDS. THE STOCKPILED TOPSOIL WILL BE STORED UNTIL READY FOR RE–USE ON SITE.

4 DRAINAGE SYSTEM CONSTRUCTION

AFTER ROUGH GRADING IS COMPLETE, THE DRAINAGE COLLECTION, CONVEYANCE AND DISCHARGE AREAS WILL BE INSTALLED. THE DRAINAGE SYSTEM DESIGN AND STRUCTURES FOR THE PROPOSED DEVELOPMENT WILL FOLLOW THE DEPARTMENT OF ENVIRONMENTAL PROTECTION'S BEST MANAGEMENT PRACTICE STANDARDS.

5 UTILITY INSTALLATION

IN THIS PHASE OF CONSTRUCTION, UNDERGROUND UTILITIES INCLUDING WATER, SEWER, GAS, POWER, TELECOMMUNICATIONS, ETC. WILL BE INSTALLED.

6 ROADWAY PAVING

DURING THIS PHASE OF CONSTRUCTION, THE ENTRANCE AND EXIT ROADWAYS FOR THE DEVELOPMENT WILL BE PAVED TO BINDER COURSE ONLY. FINAL PAVING WILL BE DONE AFTER MOST OF THE HOME SITES ARE DEVELOPED AT THE DISCRETION OF THE DEVELOPER.

7 FOUNDATION AND STRUCTURE CONSTRUCTION

THIS PHASE OF CONSTRUCTION CONSISTS OF INSTALLATION OF THE FOUNDATIONS AND CONSTRUCTION OF THE BUILDINGS. THE HOME SITES WILL BE MADE AVAILABLE FOR CONSTRUCTION AND OCCUPANCY IN PHASES. THE PHASING WILL BE DESIGNED PRIMARILY TO CONTROL CONSTRUCTION IMPACTS TO THE SITE AND ALSO CONSIDER CURRENT MARKET DEMAND FOR HOME SALES.

8 INSTALLATION OF AMENITIES

AMENITIES SUCH AS SIGNAGE AND LANDSCAPING WILL BE INSTALLED OR COMPLETED AS REQUIRED FOR SAFETY AND AS THE HOMES BECOME OCCUPIED.

9 SITE STABILIZATION

THE FINAL PHASE OF THE PROJECT IS THE RESTORATION AND STABILIZATION OF ALL EXPOSED SURFACES. DISTURBED AREAS WILL BE LANDSCAPED OR SEEDED AS NECESSARY ONLY AFTER ALL OTHER CONSTRUCTION IS FINAL. IN THE EVENT THAT WEATHER CONDITIONS PREVENT FINAL RESTORATION, TEMPORARY EROSION AND SEDIMENTATION MEASURES WILL BE EMPLOYED UNTIL THE WEATHER IS SUITABLE FOR FINAL CLEANUP. SHOULD FINAL GROUND STABILIZATION BE POSTPONED DUE TO WINTER CONDITIONS, THE EXPOSED GROUND SHALL BE COVERED IN STRAW TO PREVENT EROSION. STRAW COVER SHALL BE RESTORED AND MAINTAINED UNTIL FINAL VEGETATED COVER CAN BE ACHIEVED. A FINAL INSPECTION WILL ENSURE THAT THE PROJECT SITE IS CLEARED OF ALL PROJECT DEBRIS AND THAT EROSION AND SEDIMENTATION CONTROLS ARE FUNCTIONING PROPERLY. EROSION AND SEDIMENTATION CONTROLS WILL NOT BE REMOVED UNTIL THE SITE IS STABILIZED, THE FINAL INSPECTION IS COMPLETE AND THE ROCKLAND CONSERVATION AGENT HAS APPROVED THE EROSION CONTROL REMOVAL.

EXTREME WEATHER CONDITIONS:

IN THE ANTICIPATION OF, OR DURING A HEAVY RAIN EVENT OR DURING A RAIN EVENT IN COMBINATION WITH SNOWMELT, ALL STORMWATER CONTROLS SHALL BE CHECKED TO ENSURE ADEQUATE PROTECTION AND CAPACITY IS AVAILABLE TO PROTECT ALL EXPOSED SLOPES AND BUFFER ZONES.

STORMWATER OPERATION AND MAINTENANCE DURING CONSTRUCTION:

SEDIMENT AND EROSION CONTROL

SILT SOCKS SHALL BE INSPECTED AT LEAST ONCE A WEEK AND AFTER EACH RAINFALL EVENT. MAKE ANY REQUIRED REPAIRS IMMEDIATELY. REPAIR SCOURED AREAS ON THE BACK SIDE OF THE SILT SOCK AT THIS TIME TO PREVENT FUTURE PROBLEMS.

SHOULD THE FABRIC OF THE SILT SOCK TEAR, DECOMPOSE OR OTHERWISE BECOME INEFFECTIVE, REPLACE IT WITHIN 24 HOURS OF DISCOVERY.

REMOVE SILT DEPOSITS ONCE THEY REACH 20 TO 30 PERCENT OF THE HEIGHT OF THE SILT SOCK TO PROVIDE ADEQUATE STORAGE VOLUME FOR THE NEXT RAIN EVENT AND TO REDUCE PRESSURE ON THE FENCE. CARE SHOULD BE TAKEN TO AVOID UNDERMINING THE FENCE DURING CLEANOUT PROCESS.

SILT SOCKS ARE TO BE REMOVED UPON STABILIZATION OF THE CONTRIBUTING DRAINAGE AREA. ACCUMULATED SEDIMENT MAY BE SPREAD TO FORM A SURFACE FOR TURF OR OTHER VEGETATION ESTABLISHMENT, OR DISPOSED OF ELSEWHERE. THE AREA SHOULD BE RESHAPED TO PERMIT NATURAL DRAINAGE.

CRUSHED STONE CONSTRUCTION ENTRANCE SHALL BE INSPECTED AND MAINTAINED ON A WEEKLY BASIS. ANY BUILDUP OF MATERIAL WITHIN THE APRON SHALL BE REMOVED OFFSITE AND REPLACED WITH CLEAN CRUSHED STONE AS NEEDED.

ANY SEDIMENT TRACKED FROM THE CONSTRUCTION ENTRANCE ONTO THE STREET DURING CONSTRUCTION SHALL BE REMOVED IMMEDIATELY AND THE CONSTRUCTION ENTRANCE MUST BE ADJUSTED AS NEEDED TO PREVENT ADDITIONAL SEDIMENT TRACKING.

A MINIMUM OF 100 LINEAR FEET OF SILT SOCK, 50 LINEAR FEET OF SILTATION FABRIC, 20 STRAW BALES AND 15 STAKES SHALL BE KEPT ON SITE AT ALL TIMES TO MAINTAIN THE INSTALLED EROSION CONTROLS IN GOOD REPAIR AND PROVIDE STRAW FOR SURFACE COVER WHEN NEEDED.

INFILTRATION/DETENTION SYSTEMS

THE FOLLOWING WORK SHALL BE DONE TO STABILIZE THE SITE PRIOR TO INSTALLING THE SUBSURFACE STRUCTURES:

– DO NOT ALLOW RUNOFF FROM ANY DISTURBED AREAS ON THE SITE TO FLOW TO THE SUBSURFACE STRUCTURES.
– ROPE OFF THE AREA WHERE THE SUBSURFACE STRUCTURES ARE TO BE PLACED.
– ACCOMPLISH ANY REQUIRED EXCAVATION WITH EQUIPMENT PLACED JUST OUTSIDE THE AREA. IF THE SIZE OF THE AREA INTENDED FOR EXFILTRATION IS TOO LARGE TO ACCOMMODATE THIS APPROACH, USE TRUCKS WITH LOW–PRESSURE TIRES TO MINIMIZE COMPACTION. DO NOT ALLOW ANY OTHER VEHICLES WITHIN THE AREA TO BE EXCAVATED.
– KEEP THE AREA ABOVE AND IMMEDIATELY SURROUNDING THE SUBSURFACE SYSTEM ROPED OFF TO ALL CONSTRUCTION VEHICLES UNTIL THE FINAL TOP SURFACE IS INSTALLED.
– AT NO TIME SHALL THE AREA FOR THE INFILTRATION SYSTEM BE USED AS A TEMPORARY SEDIMENT BASIN. STOCKPILES SHALL BE PLACED AWAY FROM THE SUBSURFACE INFILTRATION SYSTEM AND SEDIMENTATION FENCES SHALL BE PLACED AROUND THE PERIMETER OF THE INFILTRATION AREA TO PREVENT THE ACCUMULATION OF SEDIMENT WITHIN THE NATIVE SOILS.

ALL INFILTRATION AREAS SHALL BE EXCAVATED AND INSTALLED AFTER THE CONSTRUCTION OF THE FOUNDATION SYSTEMS. NO HEAVY EQUIPMENT SHALL TRAVERSE THE PROPOSED INFILTRATION AREAS BEFORE OR AFTER INSTALLATION.

DUST CONTROL

SPRINKLE WATER AS NECESSARY TO CONTROL DUST DURING CONSTRUCTION.

MATERIAL STOCKPILING

STOCKPILES OF MATERIAL MUST BE PLACED OUTSIDE ALL WETLAND RESOURCE AREA BUFFERS. IF LEFT OVERNIGHT, MATERIAL STOCKPILING MUST BE PROTECTED FROM THE WEATHER.

GOOD HOUSEKEEPING

THE FOLLOWING GOOD HOUSEKEEPING BMP'S WILL BE IMPLEMENTED IN ORDER TO PREVENT POLLUTION DURING CONSTRUCTION:

PETROLEUM PRODUCTS WILL BE STORED IN TIGHTLY SEALED CONTAINERS WHICH ARE CLEARLY LABELED.

ANY ASPHALT SUBSTANCES USED ONSITE WILL BE APPLIED ACCORDING TO THE MANUFACTURER'S SPECIFICATIONS.

IF PORTABLE SANITARY UNITS ARE USED, SANITARY WASTE WILL BE REMOVED AS NECESSARY TO AVOID OVERFILLING.

ALL PAINT AND OTHER HAZARDOUS WASTE MATERIALS WILL BE TIGHTLY SEALED AND STORED WHEN NOT IN USE. EXCESS MATERIAL WILL NOT BE DISCHARGED INTO THE PUBLIC STORMWATER SYSTEM, BUT WILL BE PROPERLY DISPOSED OF ACCORDING TO THE MANUFACTURER'S SPECIFICATIONS.

IF SPRAY GUNS ARE USED, THEY WILL BE CLEANED ON A REMOVABLE TARP.

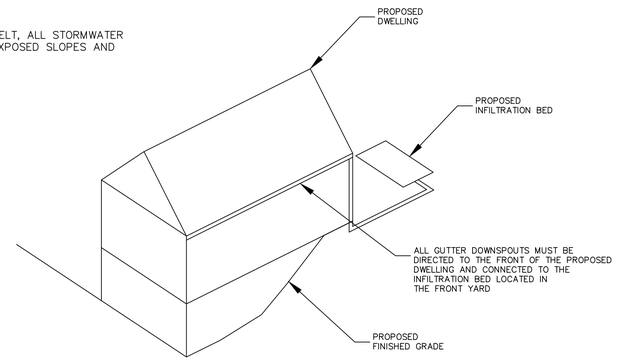

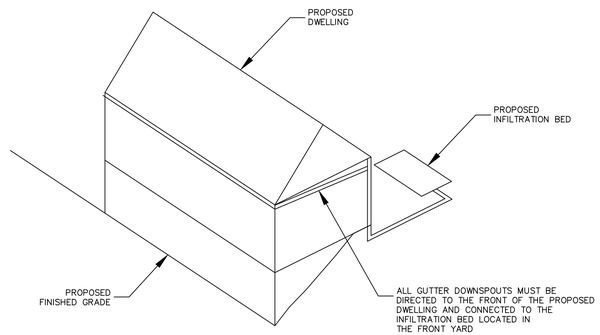

PROPOSED DWELLING ROOF LEADER ORIENTATION
NOT TO SCALE

DRAWING REVISIONS		
ACTION	DATE	DESCRIPTION

SURVEY NOTES:

1. LOCUS LIES IN F.I.R.M. ZONE A, AE AND X AS SHOWN ON COMMUNITY PANEL NO. 25023C0181K DATED JULY 6, 2021.

WETLANDS NOTES:

1. RESOURCE AREAS SHOWN HEREON WERE APPROVED BY AN ORDER OF RESOURCE AREA DELINEATION BY THE ROCKLAND CONSERVATION COMMISSION, SE 273–0400 ISSUED ON JANUARY 11, 2019.

I CERTIFY THAT THE SURVEY PERFORMED CONFORMS TO THE TECHNICAL AND PROCEDURAL STANDARDS FOR THE PRACTICE OF LAND SURVEYING SET FORTH IN 250 CMR SECTION 6.01 AND 6.02.

I CERTIFY THAT THIS PLAN CONFORMS WITH THE RULES AND REGULATIONS OF THE REGISTRY OF DEEDS AND MASSACHUSETTS LAND COURT.

I CERTIFY THAT THIS PLAN WITH THE WAIVERS HEREIN REQUESTED CONFORMS WITH THE RULES AND REGULATIONS OF THE PLANNING BOARD OF THE TOWN OF ROCKLAND, MASSACHUSETTS UNDER THE SUBDIVISION CONTROL LAW AND ZONING BYLAWS OF THE TOWN OF ROCKLAND.

COMMONWEALTH OF MASSACHUSETTS
BRENDAN P. SULLIVAN
No. 41358
REGISTERED PROFESSIONAL ENGINEER

COMMONWEALTH OF MASSACHUSETTS
BRENDAN P. SULLIVAN
No. 46922
REGISTERED PROFESSIONAL LAND SURVEYOR

BRENDAN P. SULLIVAN, P.E., P.L.S. — 1/7/22 DATE

APPROVED BY
ROCKLAND PLANNING BOARD

DATE: _____

SIGNED:

_____

_____

_____

_____

_____

_____

I HEARBY CERTIFY THAT 20 DAYS HAVE ELAPSED SINCE PLANNING BOARD APPROVAL AND THAT NO APPEAL HAS BEEN FILED IN THIS OFFICE.

ROCKLAND TOWN CLERK — *DATE*

DETAIL SHEET 5

CAVANARO CONSULTING
687 MAIN STREET
P.O. BOX 5175
NORWELL, MASSACHUSETTS 02061
PHONE: 781.659.8187
FAX: 781.659.8186

CONCORD MEADOWS
DEFINITIVE PUD PLAN
365 CONCORD STREET
ROCKLAND, MA 02370

PREPARED FOR:
CONROCK LLC
P.O. BOX 1414
DUXBURY, MA 02331

PROJECT NO. : 19.103	DRAWING NO.
SCALE : AS SHOWN	DT5
DATE : 1/7/22	
DESIGNED BY : CCH	
DRAWN BY : CCH/MCM	SHEET NO. 13 OF 14
CHECKED BY : BPS/JCC	FILENAME: W:\PR\2019\19.103\DWG\DEF.SUB\DEF.ECON.DWG

DRAWING REVISIONS		
1	12/23/21	CONSERVATION REVIEW COMMENTS
ACTION	DATE	DESCRIPTION

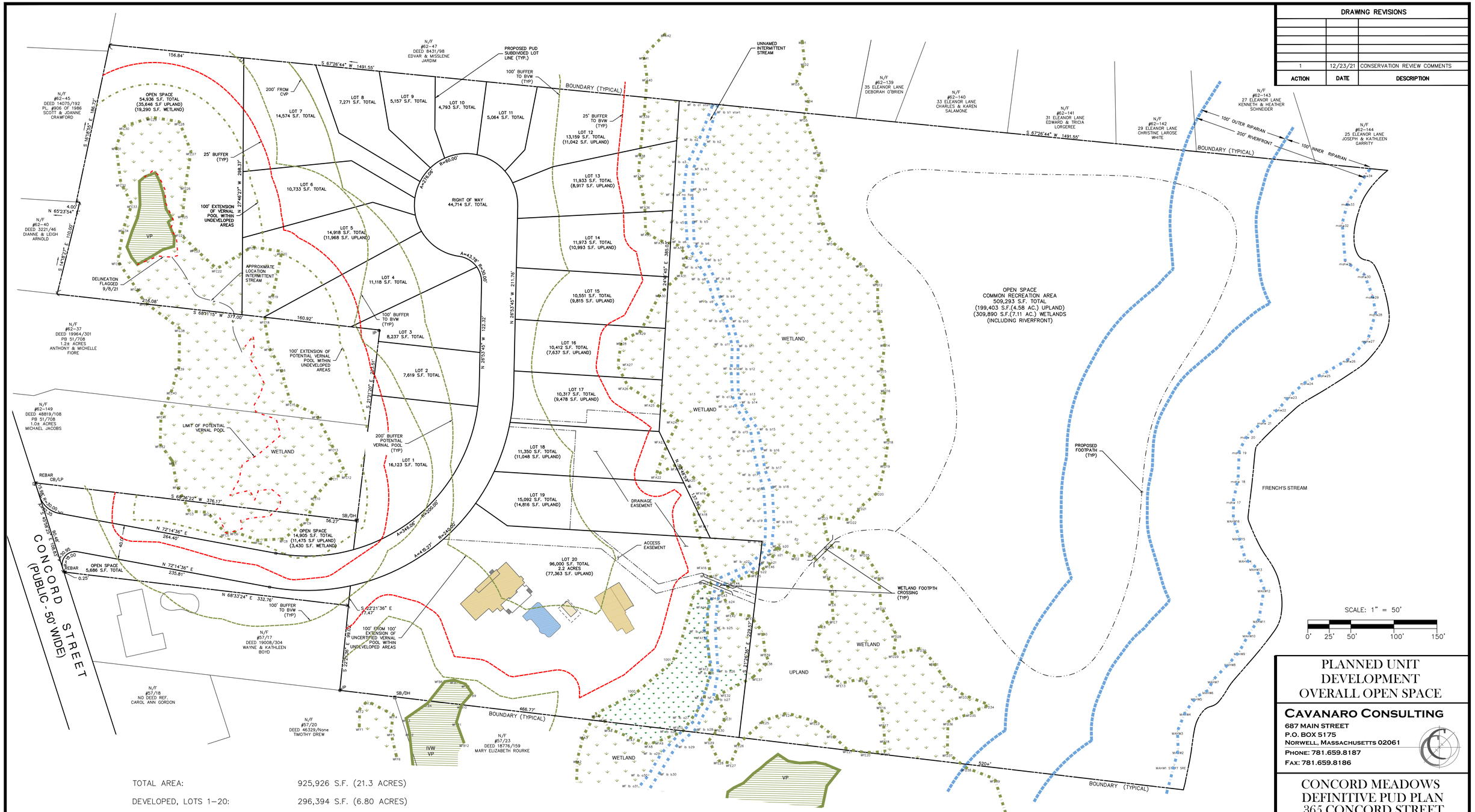

TOTAL AREA:	925,926 S.F. (21.3 ACRES)
DEVELOPED, LOTS 1–20:	296,394 S.F. (6.80 ACRES)
OPEN SPACE (NCLUDING WETLANDS):	584,820 S.F. (13.43 ACRES)
RIGHT OF WAY:	44,714 S.F. (1.03 ACRES)
OPEN SPACE –WETLAND (INCLUDING RIVERFRONT)	332,610 S.F. (7.64 ACRES)

MINIMUM REQUIRED OPEN SPACE – 35% OF TOTAL LOT AREA (.35 X 925,926) = 324,074 S.F. (7.44 ACRES)

OPEN SPACE PROVIDED: 584,820 S.F. (13.43 ACRES)

MINIMUM REQUIRED OPEN SPACE UPLAND: – 70% OF REQUIRED OPEN SPACE (0.70 X 324,074) = 226,852 S.F. (5.21 ACRES)

OPEN SPACE UPLAND PROVIDED: 252,210 S.F. (5.79 ACRES)

PLANNED UNIT DEVELOPMENT OVERALL OPEN SPACE

CAVANARO CONSULTING
687 MAIN STREET
P.O. BOX 5175
NORWELL, MASSACHUSETTS 02061
PHONE: 781.659.8187
FAX: 781.659.8186

CONCORD MEADOWS DEFINITIVE PUD PLAN 365 CONCORD STREET ROCKLAND, MA 02370

PREPARED FOR:
CONROCK LLC
P.O. BOX 1414
DUXBURY, MA 02331

PROJECT NO. : 19.103	DRAWING NO.
SCALE : AS SHOWN	OA
DATE : 11/30/21	
DESIGNED BY : CCH	
DRAWN BY : CCH/MCM	SHEET NO. 14 OF 14
CHECKED BY : BPS/JCC	FILENAME: W:\PR\2019\19.103\DWG\DEF.SUB\DEF.ECON.DWG