PROPOSED SITE PLAN
421 FOREST STREET
(ASSESSOR'S PARCEL: 14-79)
ROCKLAND, MASSACHUSETTS

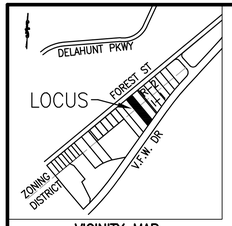

VICINITY MAP
NOT TO SCALE

DIG SAFE
MA - RI - ME - NH - VT
CALL
TOLL FREE
1-888-344-7233
UTILITIES UNDERGROUND PLANT DAMAGE PREVENTION SYSTEM

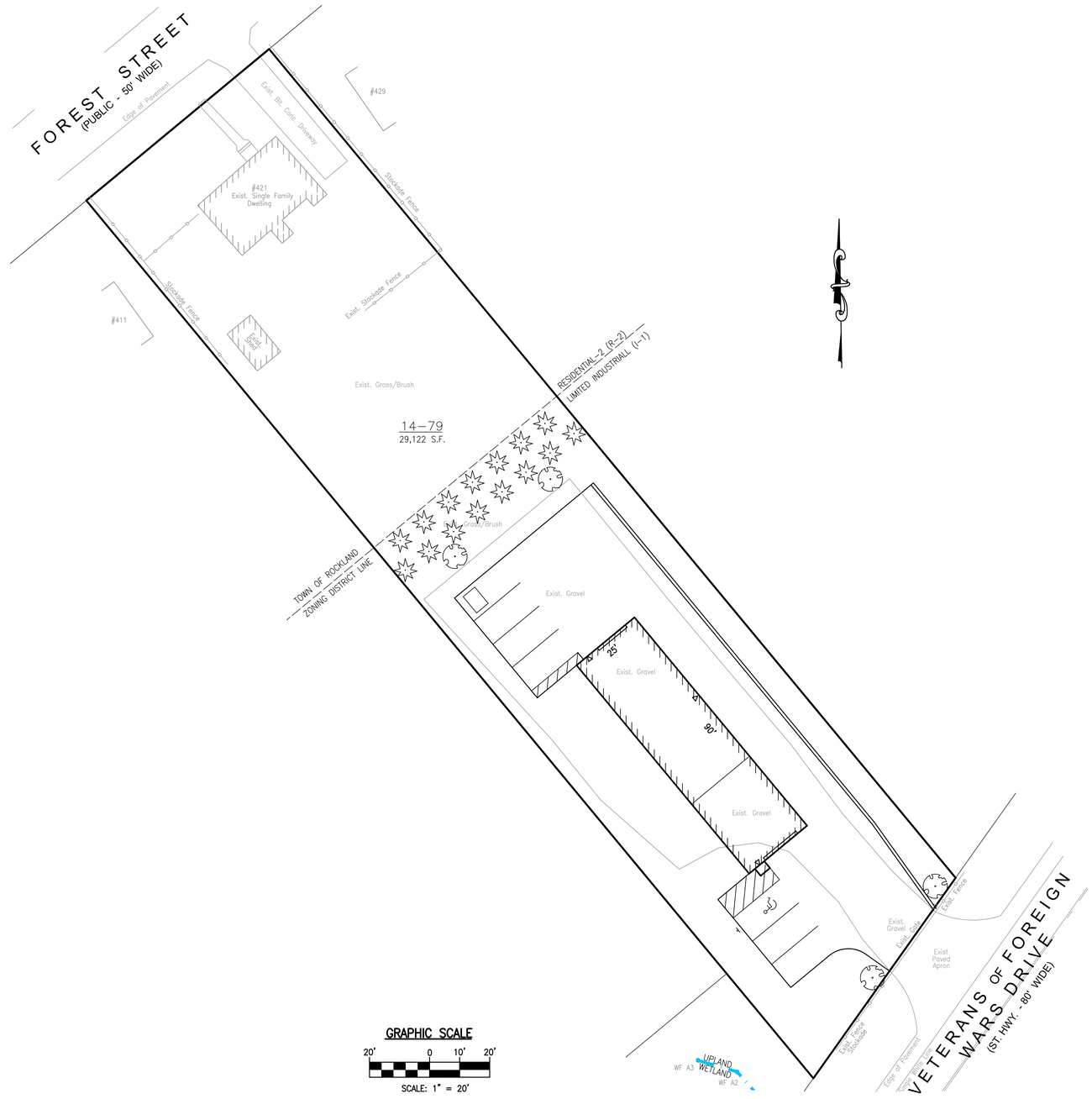

LEGEND

BH	BULK HEAD
BIT	BITUMINOUS
BK	BOOK
BP	BEANPOLE
CCB	CAPE COD BERM
CIP	CAST IN PLACE CURB
CBN	CATCH BASIN
DH	DRILL HOLE
DMH	DRAIN MAN HOLE
EM	ELECTRIC METER
EP	EDGE OF PAVEMENT
EXIST	EXISTING
GW	GUY WIRE
HH	HAND HOLE
HYD	HYDRANT
I	INVERT
IP	IRON PIPE
IR	IRON ROD
LP	LIGHT POLE
MH	MAN HOLE
MW	MONITORING WELL
N/F	NOW OR FORMERLY
OHW	OVERHEAD WIRES
PG	PAGE
PROP	PROPOSED
R/C	REBAR & CAP
SMH	SEWER MAN HOLE
TYP	TYPICAL
UP	UTILITY POLE
VCC	VERTICAL CONCRETE CURBING
VGC	VERTICAL GRANITE CURBING
WS	WATER SERVICE

GENERAL NOTES

1. DEED REFERENCES: BOOK 50431 PAGE 48
2. RECORD OWNERS: DENNIS BENOIT & MELISSA McINNIS
3. PLAN REFERENCES: PLAN BOOK 9 PAGE 257
4. THE SUBJECT PROPERTY IS LOCATED WITHIN THE TOWN OF ROCKLAND RESIDENCE-2 & LIMITED INDUSTRIAL ZONING DISTRICTS.
5. THE SUBJECT PROPERTY IS IS LOCATED WITHIN THE TOWN OF COHASSET WATER RESOURCE DISTRICT.
6. THIS PLAN IS BASED ON A GROUND SURVEY PERFORMED BY MORSE ENGINEERING COMPANY, INC. BETWEEN OCTOBER 2022 AND JULY 2023.
7. WETLAND RESOURCE AREAS WERE DELINEATED BY BRAD HOLMES, P.W.S. OF ENVIRONMENTAL CONSULTING & RESTORATION, LLC ON JUNE 13, 2023.
8. THE SUBJECT PROPERTY LIES IN ZONE "X" AS SHOWN ON FEMA COMMUNITY MAP PANEL 25023C 0093K DATED JULY 16, 2021. ZONE X IS NOT CONSIDERED TO BE A SPECIAL FLOOD HAZARD AREA.
9. THE SUBJECT PROPERTY DOES NOT LIE WITHIN A DEP DESIGNATED ZONE II RESOURCE AREA.
10. THE SUBJECT PROPERTY DOES NOT LIE WITHIN A DEP ZONE A SURFACE WATER SUPPLY
11. UTILITIES SHOWN ON THIS PLAN ARE BASED ON OBSERVANCE OF ABOVE GROUND UTILITIES AND RECORD LOCATION OF BELOW GROUND UTILITIES. NO WARRANTY IS EXPRESSED OR IMPLIED AS TO THE ACCURACY OF THE LOCATIONS OF SAID UTILITIES, OR THE EXISTENCE OR NON EXISTENCE OF ANY OTHER SUCH UTILITIES.
12. THE CONTRACTOR SHALL CONTACT DIG SAFE (888-344-7233) AND VERIFY THE LOCATIONS OF ALL EXISTING. UTILITIES PRIOR TO CONSTRUCTION.
13. THE CONTRACTOR SHALL NOTIFY THE ENGINEER OF ANY FIELD CHANGES.

GRAPHIC SCALE

20' 0 10' 20'

SCALE: 1" = 20'

INDEX TO DRAWINGS

PLAN	DESCRIPTION
1	COVER SHEET
2	EXISTING CONDITIONS PLAN
3	EROSION CONTROL PLAN
4	SITE LAYOUT & LANDSCAPE PLAN
5	GRADING & UTILITIES PLAN
6	CONSTRUCTION DETAILS

REV.	DATE	DESCRIPTION	BY:

COMMONWEALTH OF MASSACHUSETTS
JEFFREY M. HASSETT
No. 48233
REGISTERED PROFESSIONAL ENGINEER

PREPARED BY:
MORSE ENGINEERING CO., INC.
10 NEW DRIFTWAY
SUITE 303
SCITUATE, MA 02066
T: 781-545-0002

PROJECT: PROPOSED SITE PLAN
421 FOREST STREET
(ASSESSOR'S PARCEL: 14-79)
ROCKLAND, MASSACHUSETTS

PREPARED FOR: DENNIS BENOIT & MELISSA MCINNIS

JOB NO: 22-334
SCALE: AS NOTED
DESIGN: JMH
CHK: JS
DATE: 7/27/2023
PLAN TITLE: COVER SHEET
SHEET: 1 OF 6

REV.	DATE	DESCRIPTION	BY:

COMMONWEALTH OF MASSACHUSETTS
JEFFREY M. HASSETT
CIVIL
No. 49233
REGISTERED PROFESSIONAL ENGINEER

PREPARED BY:

MORSE
ENGINEERING CO., INC.
10 NEW DRIFTWAY
SUITE 303
SCITUATE, MA 02066
T: 781-545-0002

PROJECT:
PROPOSED SITE PLAN
421 FOREST STREET
(ASSESSOR'S PARCEL: 14-79)
ROCKLAND, MASSACHUSETTS

PREPARED FOR:
DENNIS BENOIT & MELISSA MCINNIS

JOB NO:	22-334
SCALE:	AS NOTED
DESIGN:	JMH
CHK:	JS
DATE:	7/27/2023
PLAN TITLE:	EROSION CONTROL PLAN
SHEET:	3 OF 6

Z:\DOCUMENTS\00-MORSECO SERVER\00-PROJECT FILES\2022 PROJECTS\22-334 - 421 FOREST\CAD\22-334.DWG

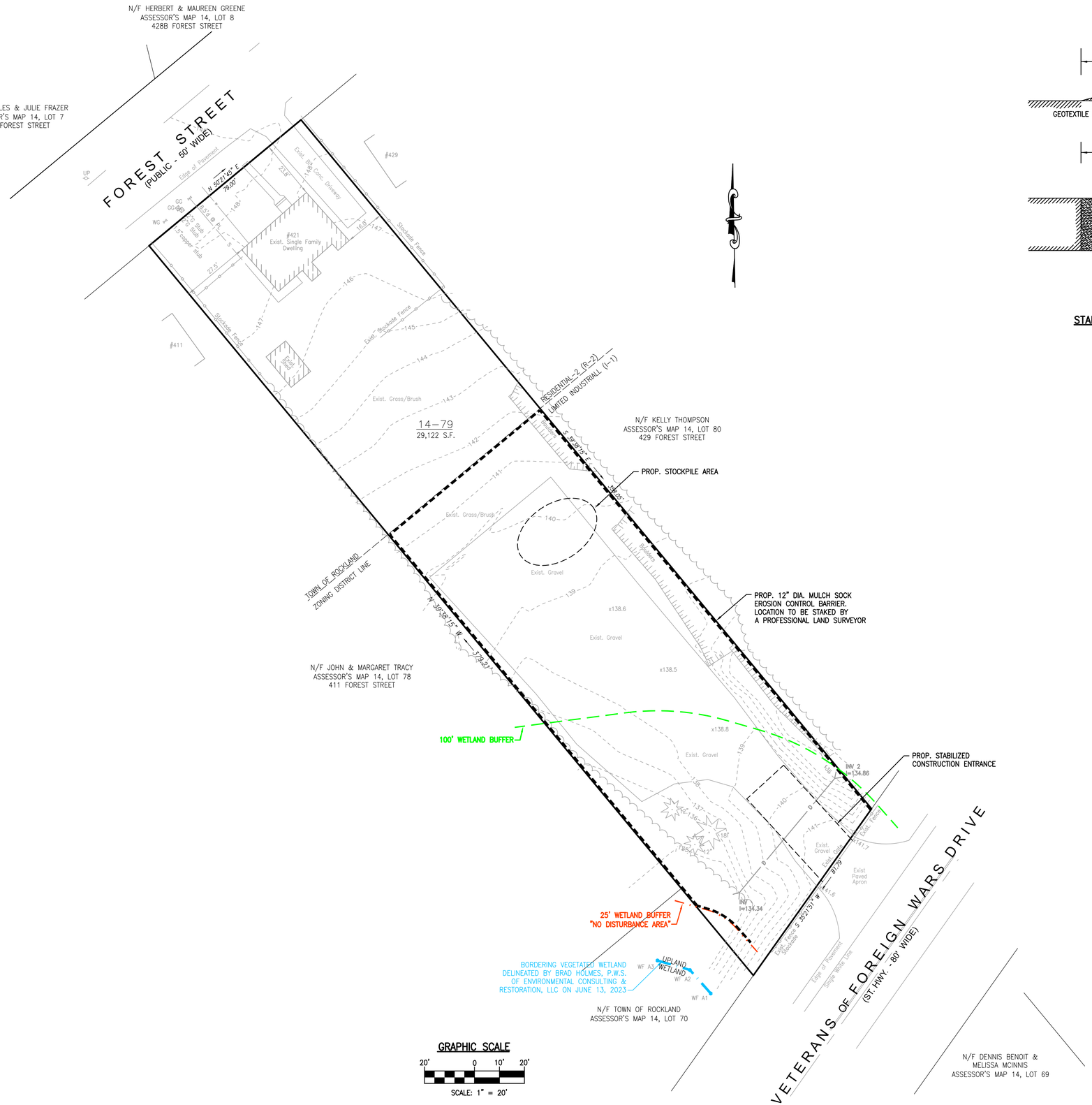

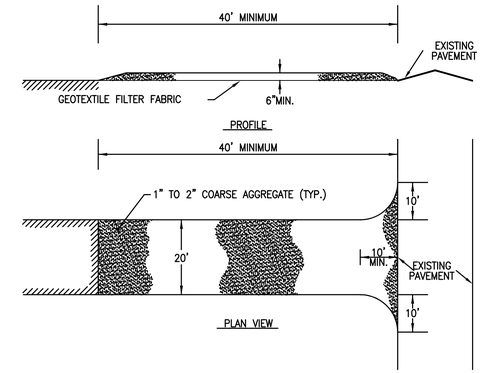

STABILIZED CONSTRUCTION ENTRANCE DETAIL
NOT TO SCALE

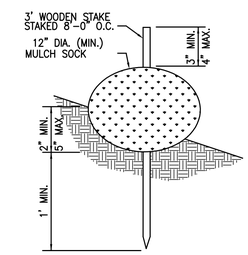

STAKED MULCH SOCK DETAIL
NOT TO SCALE

REV.	DATE	DESCRIPTION	BY:

COMMONWEALTH OF MASSACHUSETTS
JEFFREY M. HASSETT
CIVIL
No. 49233
REGISTERED PROFESSIONAL ENGINEER

PREPARED BY:
MORSE ENGINEERING CO., INC.
10 NEW DRIFTWAY
SUITE 303
SCITUATE, MA 02066
T: 781-545-0002

PROJECT:
PROPOSED SITE PLAN
421 FOREST STREET
(ASSESSOR'S PARCEL: 14-79)
ROCKLAND, MASSACHUSETTS

PREPARED FOR:
DENNIS BENOIT & MELISSA MCINNIS

JOB NO:	22-334
SCALE:	AS NOTED
DESIGN:	JMH
CHK:	JS
DATE:	7/27/2023
PLAN TITLE:	EXISTING CONDITIONS PLAN
SHEET:	2 OF 6

Z:\DOCUMENTS\00-MORSEDO SERVER\00-PROJECT FILES\2022 PROJECTS\22-334 - 421 FOREST\CAD\22-334.DWG

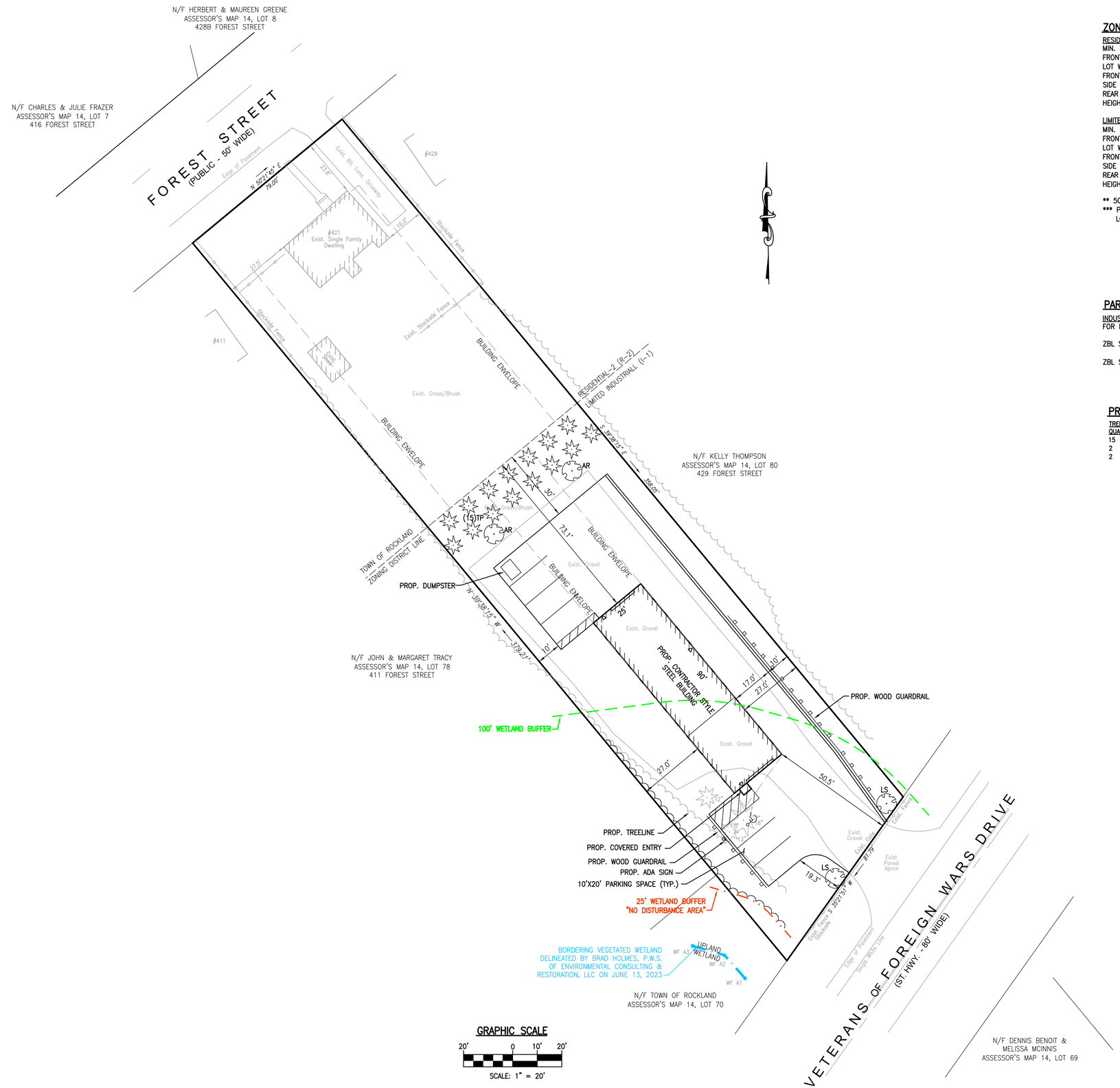

ZONING REQUIREMENTS

RESIDENTIAL-2	REQUIRED	EXISTING	PROPOSED
MIN. LOT AREA	32,670 S.F.	29,122 S.F.	NO CHANGE
FRONTAGE	110'	79.00	NO CHANGE
LOT WIDTH	110'	79.00	NO CHANGE
FRONT YARD SETBACK	25'	23.8'	NO CHANGE
SIDE YARD SETBACK	11.9'	16.0'	NO CHANGE
REAR YARD SETBACK	50'	100.5'	NO CHANGE
HEIGHT (STORIES/FT)	2.5/30'	1 STORY	NO CHANGE

LIMITED INDUSTRIAL(I-1)	REQUIRED	EXISTING	PROPOSED
MIN. LOT AREA	N/A	29,122 S.F.	NO CHANGE
FRONTAGE	110'	81.79'	NO CHANGE
LOT WIDTH	110'	79.00'	NO CHANGE
FRONT YARD SETBACK	50'	N/A	50.5'
SIDE YARD SETBACK	26.9'***	N/A	27.0'
REAR YARD SETBACK	30'**	N/A	73.1'
HEIGHT (STORIES/FT)	3.0/36'	N/A	<36'

** 50 FEET IF ABUTTING RESIDENTIAL DISTRICT
*** PER ZBL SECT. 415-34 AN EXISTING LOT WITH LESS THAN THE REQUIRED 110' OF LOT WIDTH MAY REDUCE THE SIDE YARD SETBACK BY 1' FOR EVERY 10' BELOW 110'
RESIDENTIAL-2: 15' – ((110' – 79')/10) = 11.9'
LIMITED INDUSTRIAL: 30' – ((110' – 79')/10) = 26.9'

PARKING REQUIREMENTS

INDUSTRIAL USES (GENERAL): AT LEAST ONE SPACE FOR EVERY TWO EMPLOYEES, ONE SPACE FOR EVERY VEHICLE GENERALLY BASED ON PREMISES AND ADEQUATE SPACE FOR VISITORS.

ZBL SECT. 415-22.A.2(d): IN ALL INDUSTRIAL DISTRICTS PARKING, LOADING AND ACCESS AREAS SHALL BE SETBACK 10' FROM PROPERTY LINES.

ZBL SECT. 415-22.A.2(e): IN ALL INDUSTRIAL DISTRICTS WHICH ABUT RESIDENTIAL DISTRICTS PARKING, LOADING AND ACCESS AREAS SHALL BE SETBACK 30' FROM PROPERTY LINES.

PROPOSED TREE SCHEDULE

TREES

QUANTITY	KEY	BOTANICAL NAME	COMMON NAME	SIZE	ROOT
15	TP	THUJA PLICATA	GREEN GIANT ARBORVITAE	8'-10' HT.	B&B
2	LS	LIQUIDAMBAR STYRACIFLUA	SWEET GUM	8'-10' HT.	B&B
2	AR	ACER RUBRUM	RED MAPLE	3"-4" CAL.	B&B

REV.	DATE	DESCRIPTION	BY:

COMMONWEALTH OF MASSACHUSETTS
JEFFREY M. HASSETT
CIVIL
No. 49233
REGISTERED PROFESSIONAL ENGINEER

PREPARED BY:
MORSE ENGINEERING CO., INC.
10 NEW DRIFTWAY
SUITE 303
SCITUATE, MA 02066
T: 781-545-0022

PROJECT:
PROPOSED SITE PLAN
421 FOREST STREET
(ASSESSOR'S PARCEL: 14-79)
ROCKLAND, MASSACHUSETTS

PREPARED FOR:
DENNIS BENOIT & MELISSA MCINNIS

JOB NO:	22-334
SCALE:	AS NOTED
DESIGN:	JMH
CHK:	JS
DATE:	7/27/2023
PLAN TITLE:	SITE LAYOUT & LANDSCAPE PLAN
SHEET:	4 OF 6

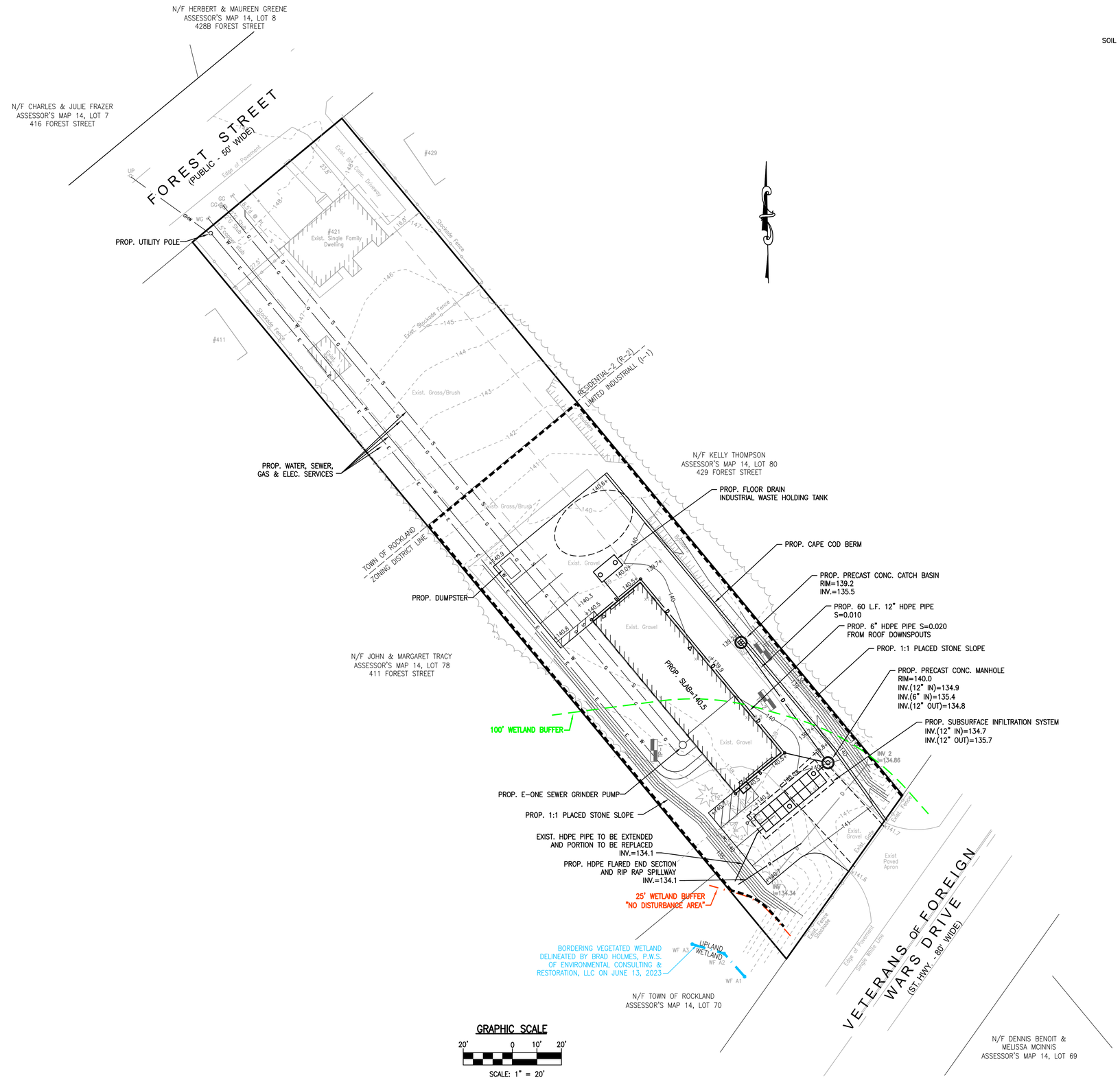

SOIL TEST DATA

SOIL TESTING AND EVALUATION BY: JEFFREY M. HASSETT, P.E. DEP SOIL EVAULATOR #12903
DATE: JULY 20, 2023

TP-1	APPROX. GRADE EL. 136.5	
	FILL	
EL. 133.8	C HORIZON LOAMY SAND 2.5Y 5/4	32"
EL. 128.2		100"

MOTTLING OBSERVED: 52"
WEEPING OBSERVED: 70"
ESHGW: 52" (EL. 132.2)

TP-2	APPROX. GRADE EL. 138.5	
	FILL	
EL. 133.4	A HORIZON SANDY LOAM 10YR 3/2	61"
EL. 132.7	B HORIZON LOAMY SAND 2.5Y 5/8	70"
EL. 131.4	C HORIZON LOAMY SAND 2.5Y 5/4	85"
EL. 128.5		120"

MOTTLING OBSERVED: 82"
WEEPING OBSERVED: 96"
ESHGW: 82" (EL. 131.7)

TP-3	APPROX. GRADE EL. 135.5	
	A HORIZON SANDY LOAM 10YR 3/2	
EL. 134.5	B HORIZON LOAMY SAND 2.5Y 5/8	12"
EL. 132.3	C HORIZON LOAMY SAND 2.5Y 5/4	38"
EL. 128.0		90"

MOTTLING OBSERVED: 44"
WEEPING OBSERVED: 56"
ESHGW: 44" (EL. 131.8)

REV.	DATE	DESCRIPTION	BY:

COMMONWEALTH OF MASSACHUSETTS
JEFFREY M. HASSETT
No. 49233
REGISTERED PROFESSIONAL ENGINEER

PREPARED BY:
MORSE ENGINEERING CO., INC.
10 NEW DRIFTWAY
SUITE 303
SCITUATE, MA 02066
T: 781-545-0002

PROJECT:
PROPOSED SITE PLAN
421 FOREST STREET
(ASSESSOR'S PARCEL: 14-79)
ROCKLAND, MASSACHUSETTS

PREPARED FOR:
DENNIS BENOIT & MELISSA MCINNIS

JOB NO:	22-334
SCALE:	AS NOTED
DESIGN:	JMH
CHK:	JS
DATE:	7/27/2023
PLAN TITLE:	GRADING & UTILITIES PLAN
SHEET:	5 OF 6

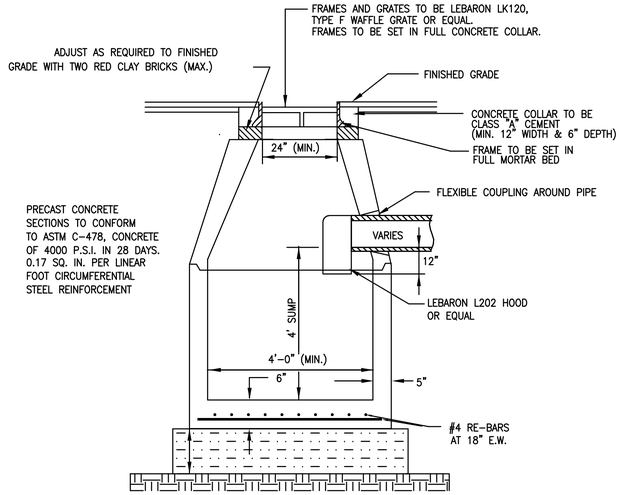

STORM DRAIN NOTES:

1. REINFORCED CONCRETE DRAIN PIPE SHALL BE CLASS IV UNLESS OTHERWISE NOTED.
2. DRAIN PIPES WITH LESS THAN 3' OF COVER SHALL BE CLASS V HDPE.
3. BACKFILL SHALL BE COMPACTED TO 95% MAXIMUM DRY DENSITY BY AASHTO T-180D METHOD.
4. SHEETING, IF USED, SHALL BE CUT OFF NO MORE THAN 12" ABOVE TOP OF PIPE.
5. UNSUITABLE SOIL BELOW THE INVERT SHALL BE REMOVED AND REPLACED WITH APPROVED MATERIAL AND SHALL NOT BE USED AS BACKFILL.
6. BRICKS SHALL BE RED CLAY.

STANDARD CATCH BASIN DETAIL

NOT TO SCALE

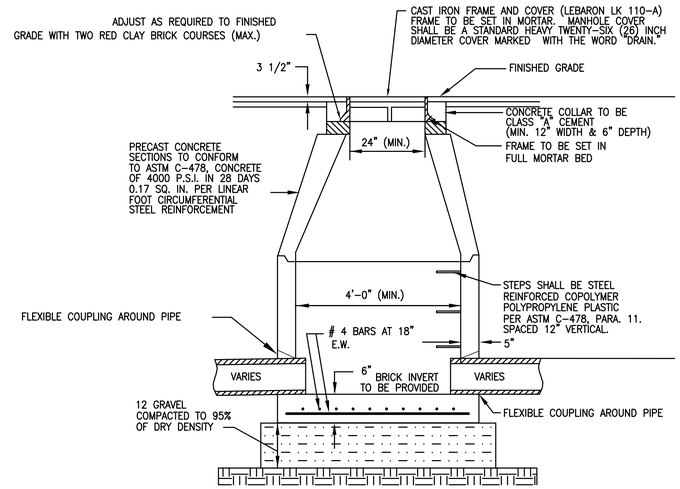

STORM DRAIN NOTES:

1. REINFORCED CONCRETE DRAIN PIPE SHALL BE CLASS IV UNLESS OTHERWISE NOTED.
2. DRAIN PIPES WITH LESS THAN 3' OF COVER SHALL BE CLASS V HDPE.
3. BACKFILL SHALL BE COMPACTED TO 95% MAXIMUM DRY DENSITY BY AASHTO T-180D METHOD.
4. SHEETING, IF USED, SHALL BE CUT OFF NO MORE THAN 12" ABOVE TOP OF PIPE.
5. UNSUITABLE SOIL BELOW THE INVERT SHALL BE REMOVED AND REPLACED WITH APPROVED MATERIAL AND SHALL NOT BE USED AS BACKFILL.
6. BRICKS SHALL BE RED CLAY.

STANDARD MANHOLE DETAIL

NOT TO SCALE

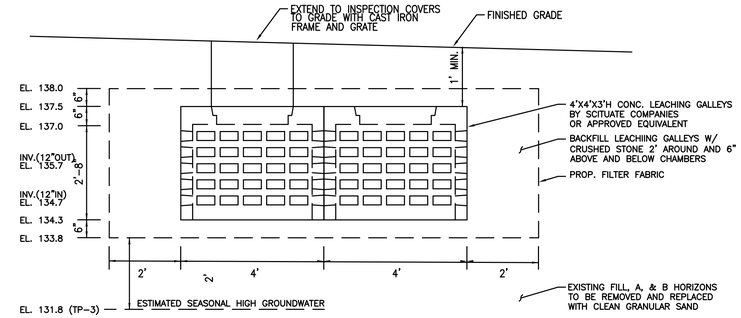

NOTE:

1. ALL ROOF LEADERS SHALL BE EQUIPPED WITH DOWNSPOUT STRAINERS.
2. NO CONSTRUCTION ACTIVITY (TRAFFIC) SHALL BE ALLOWED OVER THE LEACHING DRY WELL AREAS.
3. NO CONSTRUCTION SURFACE WATER OR DEWATERING DISCHARGES SHALL BE DISCHARGED INTO THE SUBSURFACE LEACHING LOCATIONS.

SUBSURFACE LEACHING SYSTEM

NOT TO SCALE

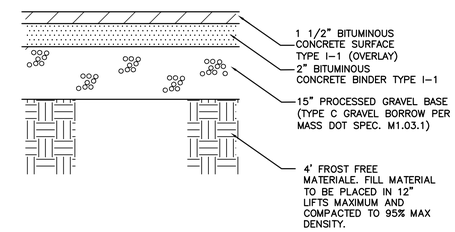

STANDARD BITUMINOUS CONCRETE PAVEMENT DETAIL

NOT TO SCALE

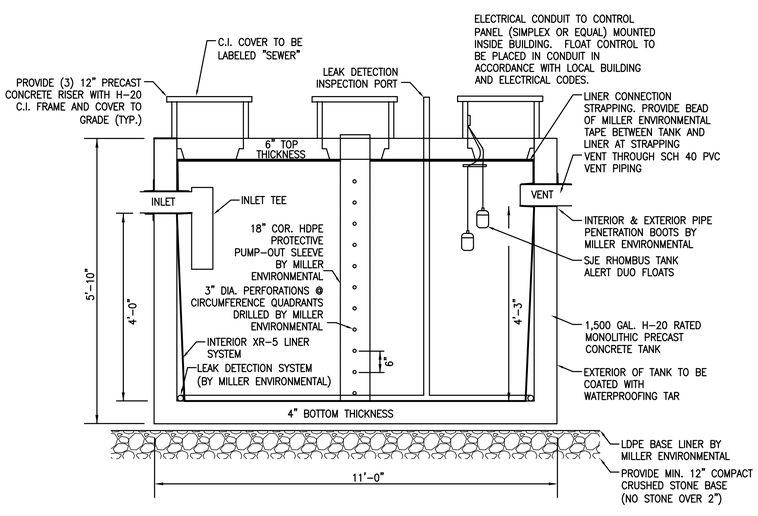

HOLDING TANK NOTES:

1. ALL LINING, LEAK DETECTION, PIPE PENETRATION BOOTS, PUMP-OUT INSERT AND ALARM FROM MILLER ENVIRONMENTAL CORP. (508-378-3800)
2. HOLDING TANK SHALL BE BE PUMPED BY A LICENSED SEPTAGE HAULER WHENEVER THE 75% FULL ALARM IS ACTIVATED OR AT LEAST EVERY MONTH, WHICHEVER IS SOONER. HOLDING TANK SHALL BE INSPECTED BY SEPTAGE HAULER OR OTHER QUALIFED PERSON CONCURRENTLY WITH PUMPING.
3. CONTRACTOR TO PROVIDE TANK CUT SHEET TO MILLER ENVIRONMENTAL CORP. AND DESIGN ENGINEER PRIOR TO ORDERING TO ENSURE TANK COMPLIES WITH THE SPECIFICATIONS OF LEAK DETECTION SYSTEM AND LINER SYSTEM.
4. THE CONCRETE TANK SHALL BE FIELD TESTED FOR WATERTIGHTNESS BY MILLER ENVIRONMENTAL PRIOR TO INSTALLATION OF THE INTERIOR LINER. THE INTERIOR LINER SHALL ALSO BE FIELD TESTED FOR WATERTIGHTNESS BY MILLER ENVIRONMENTAL.
5. THE LINER SHALL BE FABRICATED TO PROVIDE AN EFFECTIVE SEAL AROUND THE INLET PIPE, VENT PIPE AND MANHOLE RISERS.
6. A PLAQUE OR SIGN SHALL BE INSTALLED, TO INSTRUCT THE SEPTAGE HAULER AS TO SPECIFIC TECHNIQUES TO AVOID DAMAGING THE LINER DURING ROUTINE PUMPING. THE PLAQUE SHALL READ: "THIS TANK IS LINED WITH A PVC MEMBRANE. TO AVOID PUNCTURE, DO NOT USE SHARP OBJECTS WITHIN THE TANK. MILLER ENVIRONMENTAL PRODUCTS, INC. (508) 378-3800.

1,500 GAL. INDUSTRIAL WASTE HOLDING TANK DETAIL

NOT TO SCALE

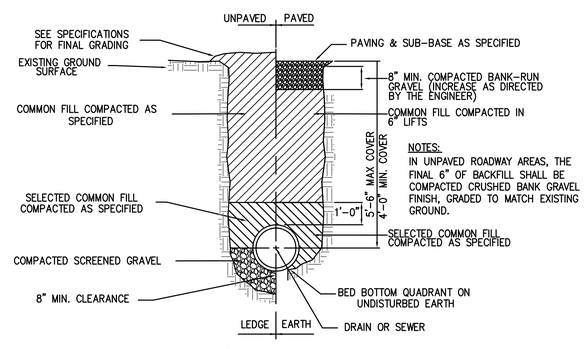

TYPICAL TRENCH

NOT TO SCALE

CAPE COD BERM DETAIL

NOT TO SCALE

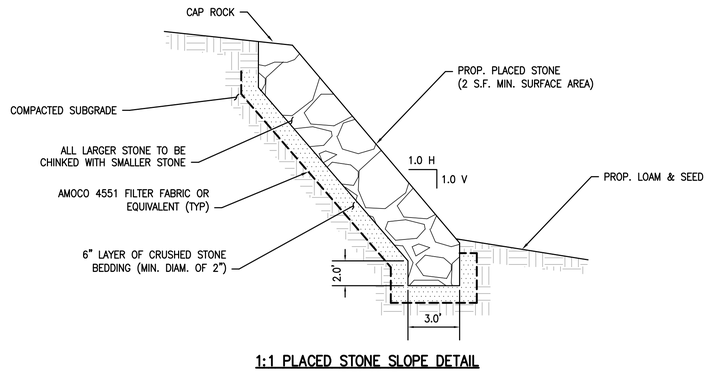

1:1 PLACED STONE SLOPE DETAIL

NOT TO SCALE

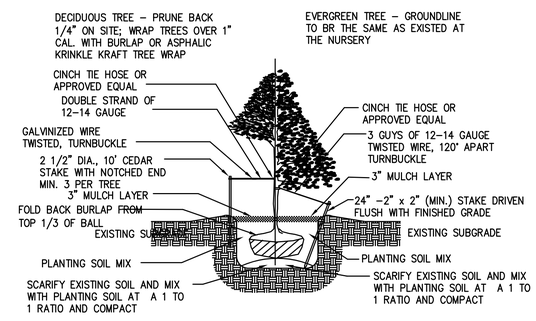

DECIDUOUS AND EVERGREEN TREE PLANTING DETAIL

NOT TO SCALE

REV.	DATE	DESCRIPTION	BY:

COMMONWEALTH OF MASSACHUSETTS
JEFFREY M. HASSETT
CIVIL
No. 49233
REGISTERED PROFESSIONAL ENGINEER

PREPARED BY:
MORSE ENGINEERING CO., INC.
10 NEW DRIFTWAY
SUITE 303
SCITUATE, MA 02066
T: 781-545-0005

PROJECT:
PROPOSED SITE PLAN
421 FOREST STREET
(ASSESSOR'S PARCEL: 14-79)
ROCKLAND, MASSACHUSETTS

PREPARED FOR:
DENNIS BENOIT & MELISSA MCINNIS

JOB NO:	22-334
SCALE:	AS NOTED
DESIGN:	JMH
CHK:	JS
DATE:	7/27/2023
PLAN TITLE:	CONSTRUCTION DETAILS PLAN
SHEET:	6 OF 6